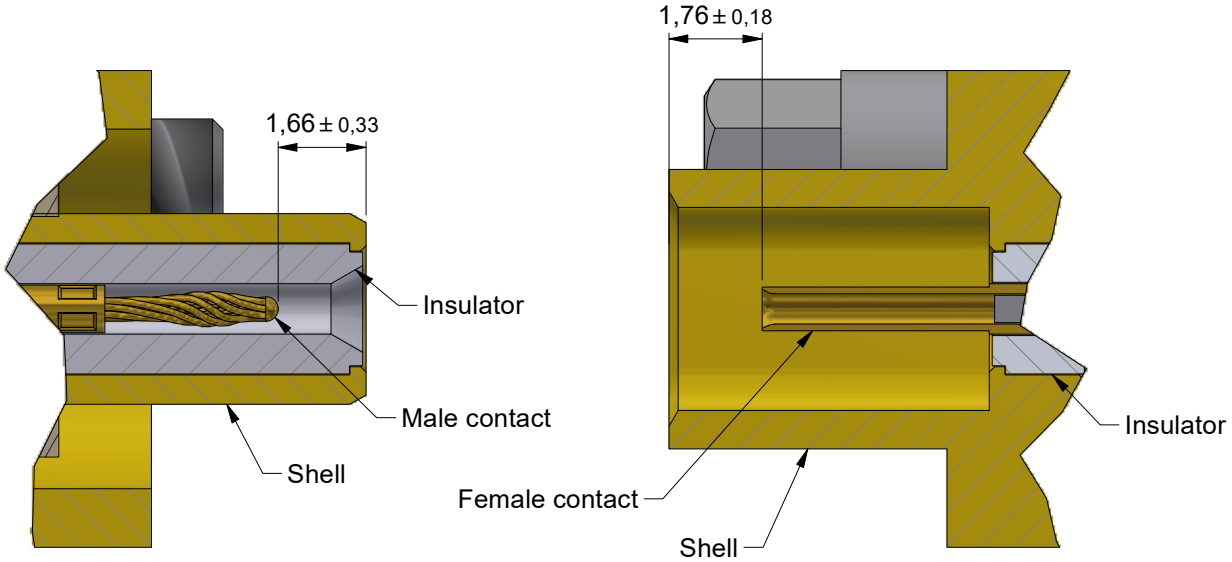
1,66 ± 0,33
Insulator
Male contact
Shell
1,76 ± 0,18
Insulator
Female contact
Shell

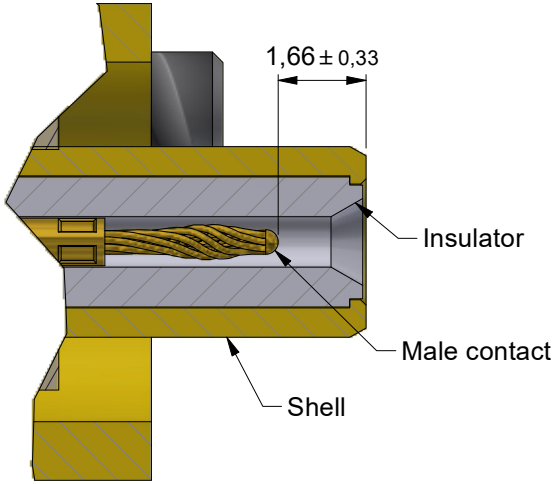
1,66 ± 0,33
Insulator
Male contact
Shell

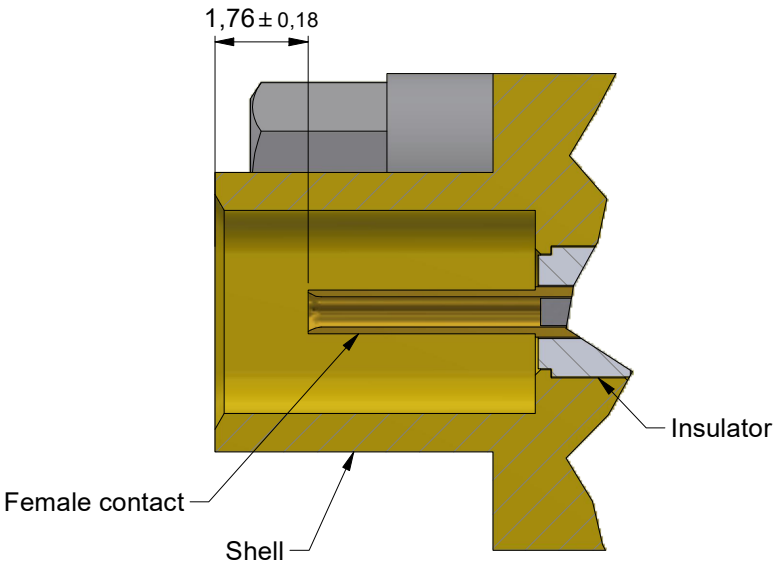
1,76 ± 0,18
Insulator
Female contact
Shell