DOCUMENT CHANGE REQUEST

DCR number 169	Changes required for: General	Originator: S Thacker
Date: 2005/04/14	Date sent: 2005/04/14	Organisation: ESA/ESTEC
Status: IMPLEMENTED		

Title:	Capacitors Fixed Ceramic Dielectric Type I High Voltage 1.0 to 5.0kV, based on case styles VR,CV &		
Number:	3001/033	Issue:	1

Other documents affected:

Page:

Page 8, Figure 2(a) VR Style Dimensions

Paragraph:

Page 8, Figure 2(a) VR Style Dimensions

Original wording:

Proposed wording:

See attached mark-up)

Figure 2(a) - VR style dimensions to be amended as follows:
Variant 01, 02, 03 dimension "Dia d" to be 0.46mm min; 0.56mm max (was 0.51/0.61)

Variant 02 dimension "H" to be 9.62mm max (was 7.62)

Variant 06 dimension "H" to be 19.78mm max (was 17.78)

Justification:

Correction of typographic errors.
Specs are now consistent with ESCC 3001/030 & 3001/034 per DCR131 for similar types.

Attachments:
DCR_Attachment_3001033.pdf, null
Modifications:
N/A
Approval signature:

Date signed:
2005-04-14

MARK-UP PAGE FOR DCR S. Thacker 14.4.2005.

FIGURE 2 - PHYSICAL DIMENSIONS

FIGURE 2(a) - VR STYLE

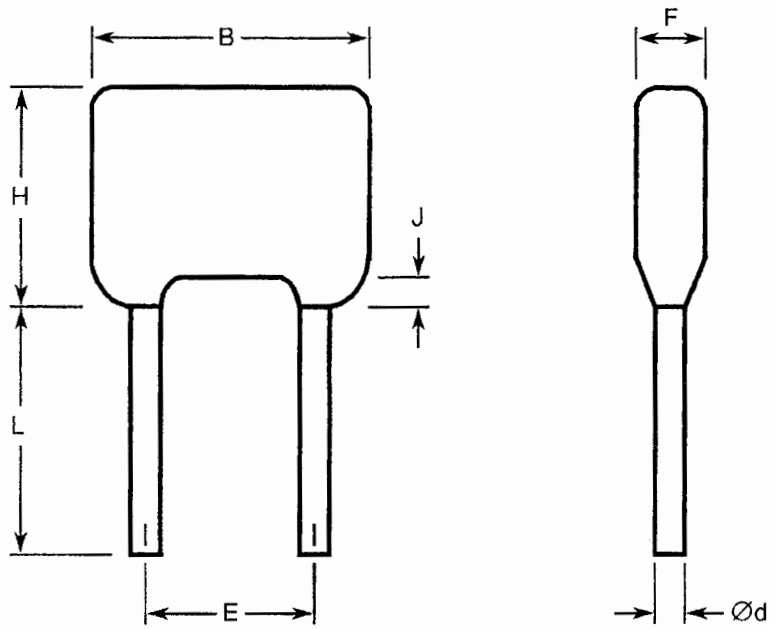

0.46 0.56 9.62

Variant	Case Size	Dimensions (mm)								
		B	Ød		E		F	H	J	L
		(max)	(min)	(max)	(min)	(max)	(max)	(max)	(max)	(min)
01	VR30S	7.62	~~0.51~~	~~0.81~~	4.58	5.58	5.00	4.60	1.50	31.70
02	VR30	7.62	~~0.51~~	~~0.81~~	4.58	5.58	5.00	~~7.62~~	1.50	31.70
03	VR40	10.16	~~0.51~~	~~0.81~~	4.58	5.58	5.00	11.70	1.50	31.70
04	VR50	12.70	0.59	0.69	9.66	10.66	5.10	14.20	1.50	31.70
05	VR66	17.50	0.86	0.96	14.20	15.20	6.40	16.50	1.50	31.70
06	VR84	23.62	0.86	0.96	20.40	22.00	6.40	~~17.78~~	1.50	31.70
07	VR90	23.50	0.86	0.96	20.40	22.00	6.40	42.00	1.50	31.70

19.78