DOCUMENT CHANGE REQUEST

DCR number 192	Changes required for: Qualification	Originator: TETART Jean-Paul
Date: 2005/07/15	Date sent: 2005/07/15	Organisation: CNES
Status: IMPLEMENTED		

Title:	Diodes Microwave Silicon, PIN, Fast Switching, based on types DH50151 to DH50157		
Number:	5513/031	Issue:	3

Other documents affected:

5513/032-3, 5513/033-3, 5513/034-3, 5513/036-3, 5513/037-3, 5513/038-3

Page:

All

Paragraph:

All

Original wording:

Proposed wording:

As per attached Word Files

Justification:

Addition of new variants resulting from the introduction of a new package style (BH 155)
Correction of Rth values and as a result of Pmax and Imax values
Change of temperature conditions in Table 5a and 5b
Change TEMEX to CHELTON TELECOM & MICROWAVE when applicable (appendices)

Attachments:

ESCC_5513_031_May_2007__Issue3.pdf, ESCC_5513_033_May_2007__Issue3.pdf,
ESCC_5513_038_May_2007__Issue3.pdf, ESCC_5513_034_May_2007__Issue3.pdf,
ESCC_5513_032_May_2007__Issue3.pdf, ESCC_5513_036_May_2007__Issue3.pdf, null

Modifications:

N/A

Approval signature:

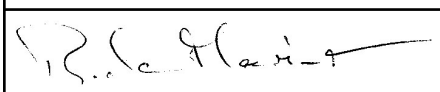

Date signed:

2005-07-15

Pages 1 to 23

ORIGINAL

MICROWAVE, SILICON, PIN,

FAST SWITCHING, DIODES,

BASED ON TYPES DH50201 to DH50209

ESCC Detail Specification No. 5513/033

MAY 2007

Issue / Rev.	Approved by		
	NAME	Date	VISA
3	R&D : S. PEREIRA	07/06/07	
	Production Management : S. CASSOU	08/06/07	
	Marketing : L. ETIENNE	11/06/07	
	Q.A : J-P. TETART	13-06-2007	

DOCUMENTATION CHANGE NOTICE

Rev. Letter	Rev. Date	CHANGE Reference / Item	Approved DCR No.
Issue 1 A	July 1997	Initial version	
Issue 2	January 2005	All Pages	
Issue 3	May 2007	(As agreed with ESA) All Pages	

TABLE OF CONTENTS

1. GENERAL 5

1.1 SCOPE 5
1.2 COMPONENT TYPE VARIANTS 5
1.3 MAXIMUM RATINGS 5
1.4 PARAMETERS DERATING INFORMATION 5
1.5 PHYSICAL DIMENSIONS 5
1.6 FUNCTIONAL DIAGRAM 5
1.7 HANDLING PRECAUTIONS 5

2. APPLICABLE DOCUMENTS 5

3. TERMS, DEFINITIONS, ABBREVIATIONS, SYMBOLS AND UNITS 5

4. REQUIREMENTS 15

4.1 GENERAL 15
4.2 DEVIATIONS FROM GENERIC SPECIFICATION 15
4.2.1 Deviations from Special In-process Controls 15
4.2.2 Deviations from Final Production Tests (Chart II) 15
4.2.3 Deviations from Burn-in and Electrical Measurements (Chart III) 15
4.2.4 Deviations from Qualification Tests (Chart IV) 15
4.2.5 Deviations from Lot Acceptance Tests (Chart V) 15
4.3 MECHANICAL AND ENVIRONMENTAL REQUIREMENTS 15
4.3.1 Dimension Check 15
4.3.2 Weight 15
4.3.3 Terminal Strength 16
4.3.1 Bond Strength 16
4.3.2 Die Shear 16
4.3.1 High Temperature Stabilisation Bake 16
4.4 MATERIAL AND FINISHES 16
4.4.1 Case 16
4.4.2 Lead Material and Finish 16
4.5 MARKING 16
4.5.1 General 16
4.5.2 Cathode Identification 17
4.5.3 The ESCC Component Number 17
4.5.4 Traceability Information 17
4.6 ELECTRICAL MEASUREMENTS 17
4.6.1 Electrical Measurements at Room Temperature 17
4.6.2 Electrical Measurements at High and Low Temperatures 17
4.6.3 Circuits for Elestrical Measurements 17
4.7 BURN-IN TESTS 17
4.7.1 Parameter Drift Values 17
4.7.2 Conditions for High Temperature Reverse Bias Burn-in 17
4.7.3 Conditions for Power Burn-in 17
4.7.4 Electrical Circuits for High Temperature Reverse Bias and Power Burn-in 17
4.8 ENVIRONMENTAL AND ENDURANCE TESTS (CHARTS IV AND V OF ESCC GENERIC SPECIFICATION NO. 5010) 21
4.8.1 Electrical Measurements on Completion of Environmental Tests 21
4.8.2 Electrical Measurements at Intermediate Points and on Completion of Endurance Tests 21
4.8.3 Conditions for Operating Life Tests (Part of Endurance Testing) 21
4.8.4 Electrical Circuits for Operating Life Tests 21
4.9 TOTAL DOSE IRRADIATION TESTING 21
4.10 SPECIAL TESTING 21

TABLES

1(a)	Type Variants	6
1(b)	Maximum Ratings	8
2(a)	Electrical Measurements at Room Temperature – D.C. Parameters	18
2(b)	Electrical Measurements at Room Temperature – A.C. Parameters	18
3	Electrical Measurements at High and Low Temperatures	18
4	Parameter drift Values	19
5(a)	Conditions for High Temperature Reverse Bias Burn-In	20
5(b)	Conditions for Power Burn-In and Operating Life Tests	20
6	Electrical Measurements at Intermediate Points and on Completion of Endurance Testing	22
7	Electrical Measurements During and on Completion of Irradiation Testing	22

FIGURES

1	Parameter Derating Information	9
2	Physical Dimensions	10
3	Functional Diagram	14
4	Circuits for Electrical Measurements	19
5(a)	Electrical circuit for High Temperature Reverse Bias Burn-in	20
5(b)	Electrical Circuit for Power Burn-in and Operating Life Tests	21
6	Bias Conditions for Irradiation Testing	22

APPENDICES (APPLICABLE TO SPECIFIC MANUFACTURERS ONLY)

'A'	Agreed Deviations for Chelton Telecom & Microwave (F)	23

1. GENERAL

1.1 Scope

This specification details the ratings, physical and electrical characteristics, test and inspection data for a Microwave Silicon PIN Fast Switching Diode, based on Types DH50201 to DH50209. It shall be read in conjunction with ESCC Generic Specification No. 5010, the requirements of which are supplemented herein.

1.2 Component type variants

Variants of the basic diodes specified herein, which are also covered by this specification are given in Table 1(a).

1.3 Maximum ratings

The maximum ratings, which shall not be exceeded at any time during use or storage, applicable to the diodes specified herein, are as scheduled in Table 1(b).

1.4 Parameters derating information

The derating information applicable to the diodes specified herein is shown in Figure 1.

1.5 Physical dimensions

The physical dimensions of the diodes specified herein are shown in Figure 2.

1.6 Functional diagram

The functional diagram, showing lead identification, of the diodes specified herein, is shown in Figure 3.

1.7 Handling precautions

These devices are susceptible to be damaged by electrostatic discharge. Therefore, suitable precautions shall be employed for protection during all phases of manufacture, testing, packaging, shipment and any handling.

The components are categorised as Class 2 with a Minimum Critical Path Failure Voltage (MCPFV) of 1400V.

2. APPLICABLE DOCUMENTS

The following documents form part of this specification and shall be read in conjunction with it :

(a) ESCC Generic Specification No. 5010 for Discrete Microwave Semiconductor Components.
(b) MIL-STD-750, Test Methods for Semiconductor Devices.

3. TERMS, DEFINITIONS, ABBREVIATIONS, SYMBOLS AND UNITS

For the purpose of this specification, the terms, definitions, abbreviations, symbols and units specified in ESCC Basic Specification No. 21300 shall apply. In addition the following symbols are used :

C_T = Total Capacitance.

TABLE 1(a) – TYPE VARIANTS

(1) VARIANT	(2) BASED ON TYPE	(3) FIGURE	(4) TOTAL CAPACITANCE C_T (pF) (Note 1) MAX	(5) FORWARD SERIES RESISTANCE R_{SF} (Ω) MAX	(6) MINORITY CARRIER LIFETIME τ_L (ns) MIN	(7) BODY-LID AND/OR LEAD MATERIAL AND FINISH
01	DH50201	2 (a)	0.19	2.3	240	D7 - E2
02		2 (b)				D7
03		2 (c)				D7 - E2
04		2 (d)				
05		2 (e)				
06		2 (f)				
07		2 (g)	0.26			A7 - D7
64		2 (h)	0.20			**D7**
08	DH50202	2 (a)	0.21	2.1	320	D7 - E2
09		2 (b)				D7
10		2 (c)				D7 - E2
11		2 (d)				
12		2 (e)				
13		2 (f)				
14		2 (g)	0.28			A7 - D7
65		2 (h)	0.22			**D7**
15	DH50203	2 (a)	0.25	1.5	400	D7 - E2
16		2 (b)				D7
17		2 (c)				D7 - E2
18		2 (d)				
19		2 (e)				
20		2 (f)				
21		2 (g)	0.32			A7 - D7
66		2 (h)	0.26			**D7**
22	DH50204	2 (a)	0.30	1.3	520	D7 - E2
23		2 (b)				D7
24		2 (c)				D7 - E2
25		2 (d)				
26		2 (e)				
27		2 (f)				
28		2 (g)	0.37			A7 - D7
67		2 (h)	0.31			**D7**

NOTES

1. V_R = - 50.0V, f = 1.0MHz

TABLE 1(a) – TYPE VARIANTS (CONTINUED)

(1) VARIANT	(2) BASED ON TYPE	(3) FIGURE	(4) TOTAL CAPACITANCE C_T (pF) (Note 1) MAX	(5) FORWARD SERIES RESISTANCE R_{SF} (Ω) MAX	(6) MINORITY CARRIER LIFETIME τ_L (ns) MIN	(7) BODY-LID AND/OR LEAD MATERIAL AND FINISH
29	DH50205	2 (a)	0.36	1.0	640	D7 - E2
30		2 (b)				D7
31		2 (c)				D7 - E2
32		2 (d)				
33		2 (e)				
34		2 (f)				
35		2 (g)	0.43			A7 - D7
68		2 (h)	0.37			D7
36	DH50206	2 (a)	0.53	0.8	710	D7 - E2
37		2 (b)				D7
38		2 (c)				D7 - E2
39		2 (d)				
40		2 (e)				
41		2 (f)				
42		2 (g)	0.60			A7 - D7
69		2 (h)	0.54			D7
43	DH50207	2 (a)	0.73	0.7	840	D7 - E2
44		2 (b)				D7
45		2 (c)				D7 - E2
46		2 (d)				
47		2 (e)				
48		2 (f)				
49		2 (g)	0.80			A7 - D7
70		2 (h)	0.74			**D7**
56	DH50208	2 (g)	1.00	0.6	1000	**A7 - D7**
63	DH50209	2 (g)	1.40	0.5	1200	A7 - D7

NOTES

1. V_R = - 50.0V, f = 1.0MHz

TABLE 1(b) - MAXIMUM RATINGS

No.	CHARACTERISTIC	SYMBOL	MAXIMUM RATINGS	UNIT	REMARKS
1	D.C. Reverse Voltage	V_R	-200	V	I_R = 10 µA
2	D.C. Forward Current (Continuous) Variants 64 to 70 Variants 01 to 06, 08 to 13 and 15 to 20 Variants 22 to 27, 29 to 34, 36 to 41 and 43 to 48 Variants 07, 14 and 21 Variants 28, 35, 42, 49 and 56 Variant 63	I_F	 **90** **150** **180** **240** **300** **600**	mA	Note 1
3	R.F. Power Dissipation Variants 64 to 70 Variants 01 to 06, 08 to 13 and 15 to 20 Variants 22 to 27, 29 to 34, 36 to 41 and 43 to 48 Variants 07, 14 and 21 Variants 28, 35, 42, 49 and 56 Variant 63	P_{tOt}	 0.30 0.50 0.62 0.83 1.25 1.87	W	Note 1
4	Thermal Resistance (Junction to Case) Variants 64 to 70 Variants 01 to 06, 08 to 13 and 15 to 20 Variants 22 to 27, 29 to 34, 36 to 41 and 43 to 48 Variants 07, 14 and 21 Variants 28, 35, 42, 49 and 56 Variant 63	$R_{TH(J-C)}$	 250 150 120 90 60 40	°C/W	-
5	Operating Temperature Range	T_{op}	-55 to +150	°C	T_{case}
6	Storage Temperature Range	T_{stg}	-65 to +175	°C	-
7	Soldering Temperature	T_{sol}	+ 230	°C	Note 2

NOTES

1. At T_{case} = + 75°C. For derating at T_{case} > + 75°C, see Figure 1.
2. Duration 5 seconds maximum and the same termination shall not be resoldered until 3 minutes have elapsed.

FIGURE 1 - PARAMETER DERATING INFORMATION

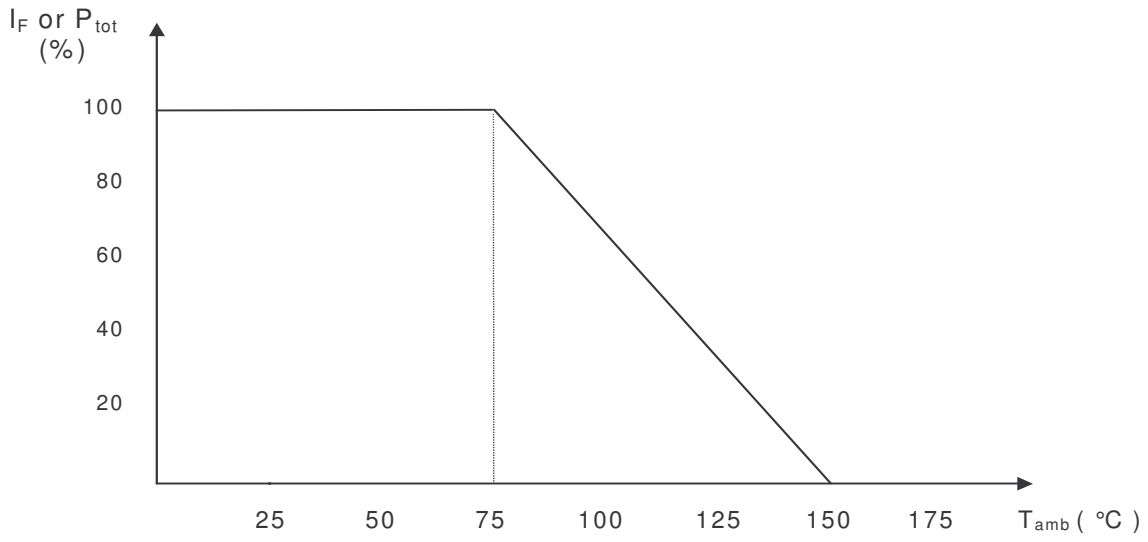

Forward Current or Power Dissipation versus Temperature

FIGURE 2 - PHYSICAL DIMENSIONS

FIGURE 2(a) – Variants 01, 08, 15, 22, 29, 36, 43

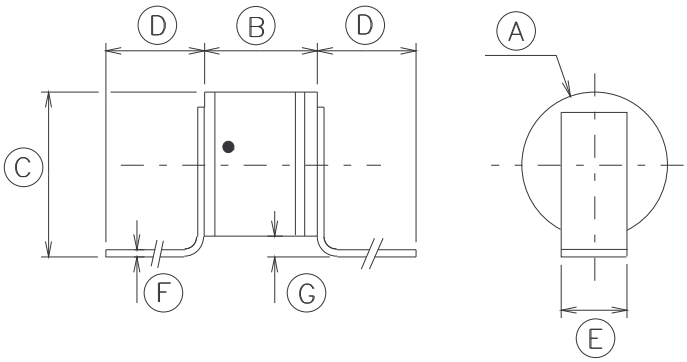

SYMBOL	MILLIMETERS	
	MIN.	MAX.
A	∅ 1.07	∅ 1.47
B	0.95	1.35
C	1.30	1.90
D	2.50	-
E	0.55	0.65
F	0.06	0.10
G	0.10	0.50

FIGURE 2(b) – Variants 02, 09, 16, 23, 30, 37, 44

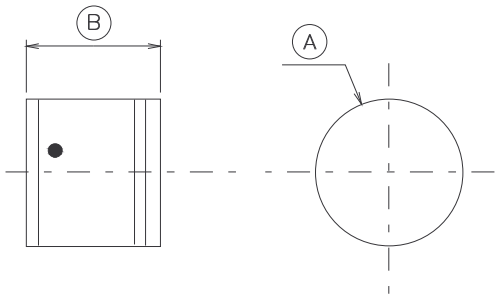

SYMBOL	MILLIMETERS	
	MIN.	MAX.
A	∅ 1.07	∅ 1.47
B	0.95	1.35

FIGURE 2 - PHYSICAL DIMENSIONS (CONTINUED)

FIGURE 2(c) – Variants 03, 10, 17, 24, 31, 38, 45

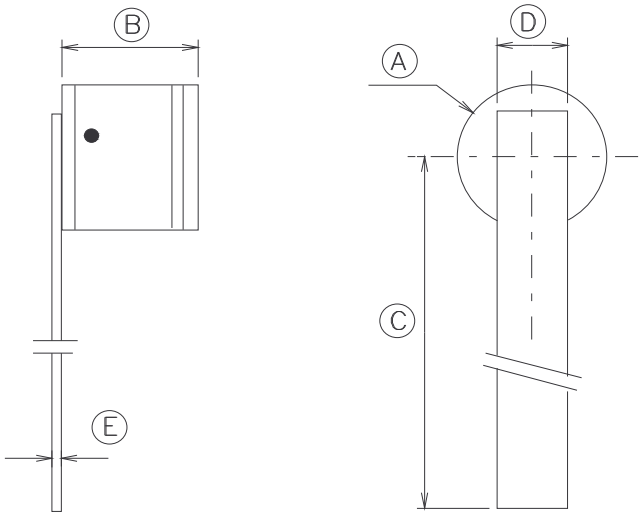

SYMBOL	MILLIMETERS	
	MIN.	MAX.
A	∅ 1.07	∅ 1.47
B	0.95	1.35
C	5.00	-
D	0.55	0.65
E	0.06	0.10

FIGURE 2(d) – Variants 04, 11, 18, 25, 32, 39, 46

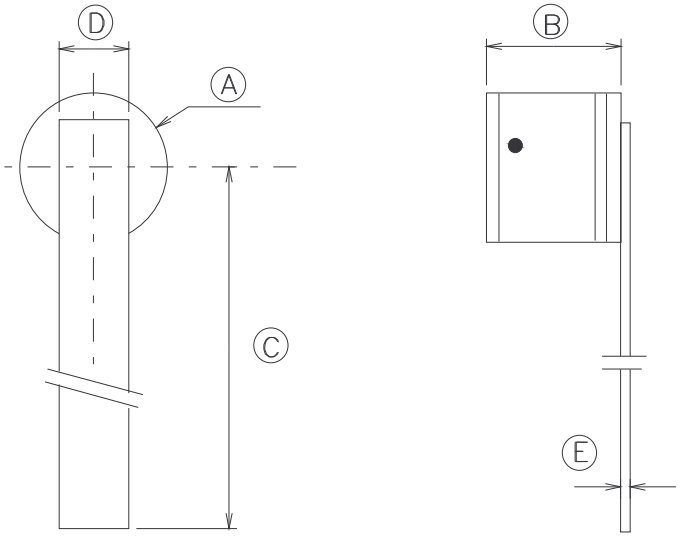

SYMBOL	MILLIMETERS	
	MIN.	MAX.
A	∅ 1.07	∅ 1.47
B	0.95	1.35
C	5.00	-
D	0.55	0.65
E	0.06	0.10

FIGURE 2 - PHYSICAL DIMENSIONS (CONTINUED)

FIGURE 2(e) – Variants 05, 12, 19, 26, 33, 40, 47

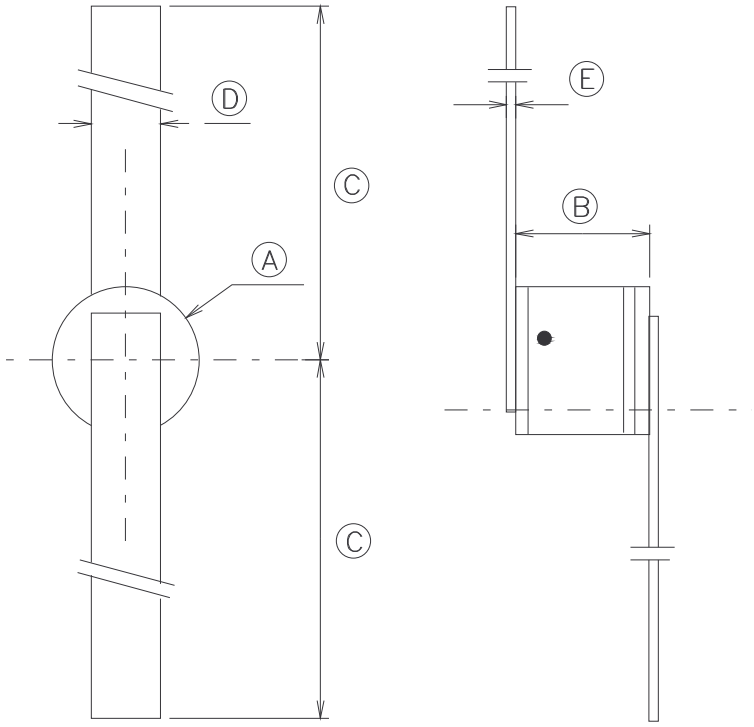

SYMBOL	MILLIMETERS	
	MIN.	MAX.
A	∅1.07	∅1.47
B	0.95	1.35
C	5.00	-
D	0.55	0.65
E	0.06	0.10

FIGURE 2(f) – Variants 06, 13, 20, 27, 34, 41, 48

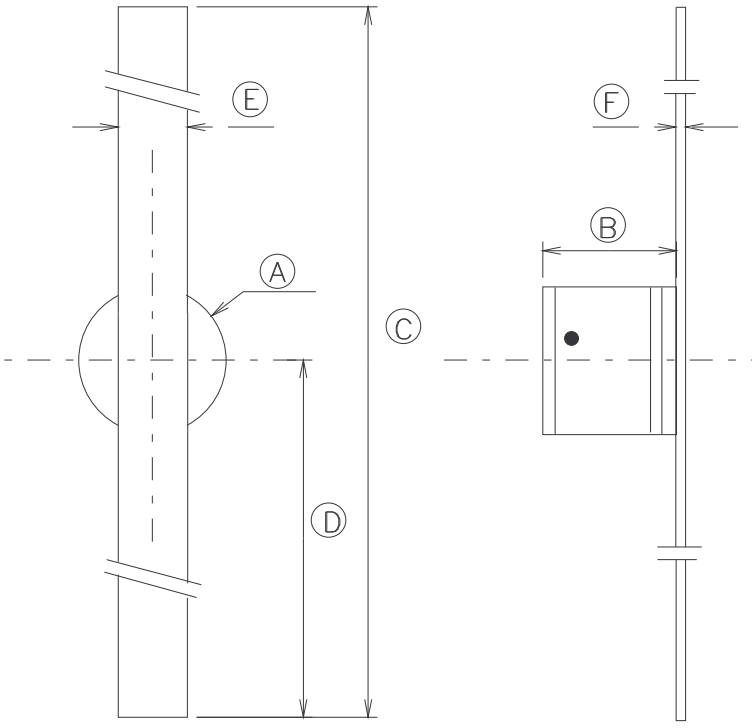

SYMBOL	MILLIMETERS	
	MIN.	MAX.
A	∅ 1.07	∅ 1.47
B	0.95	1.35
C	10.00	10.40
D	5.00	-
E	0.55	0.65
F	0.06	0.10

FIGURE 2 - PHYSICAL DIMENSIONS (CONTINUED)

FIGURE 2(g) – Variants 07, 14, 21, 28, 35, 42, 49, 56, 63

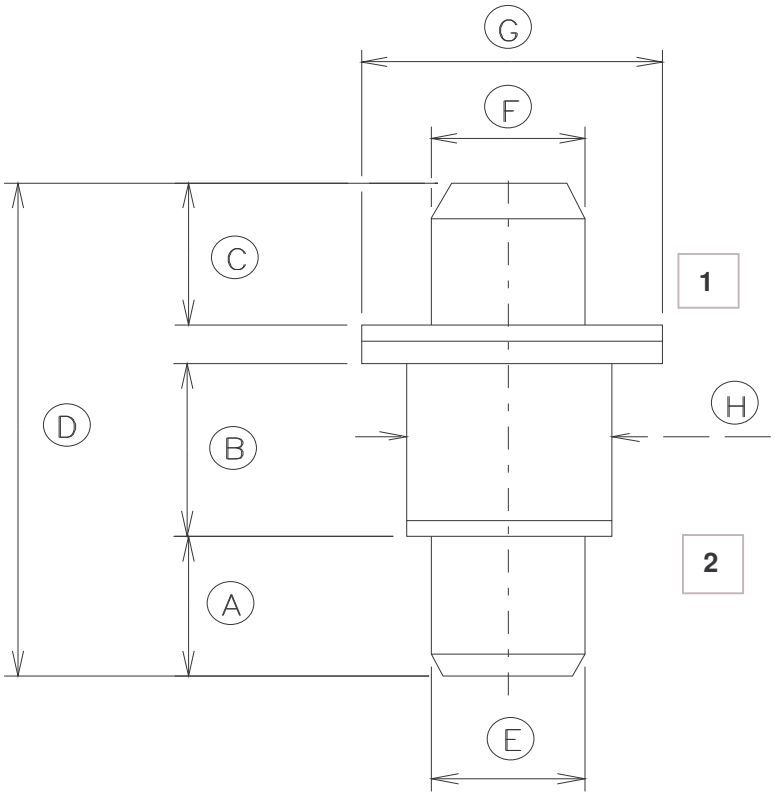

SYMBOL	MILLIMETERS	
	MIN.	MAX.
A	1.52	1.63
B	1.75	1.85
C	1.52	1.63
D	5.20	5.72
E	∅ 1.52	∅ 1.63
F	∅ 1.52	∅ 1.63
G	∅ 3.00	∅ 3.23
H	∅ 1.95	∅ 2.11

FIGURE 2 - PHYSICAL DIMENSIONS (CONTINUED)

FIGURE 2(h) – Variants 64 to 70

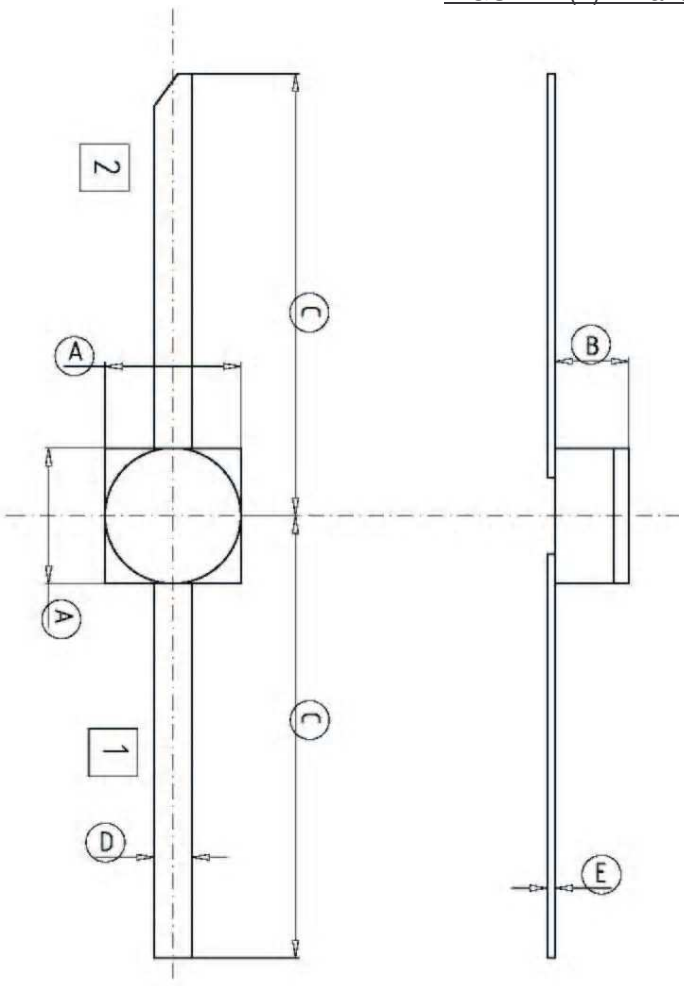

SYMBOL	MILLIMETERS	
	MIN.	MAX.
A	1.68	1.88
B	0.91	1.01
C	6.15	6.55
D	0.45	0.55
E	0.08	0.12

FIGURE 3 - FUNCTIONAL DIAGRAM



1 : Anode
2 : Cathode

NOTES

1. For variants 01 to 06, 08 to 13, 15 to 20, 22 to 27, 29 to 34, 36 to 41 and 43 to 48: The cathode end shall be marked with a black dot. The marking will not be on the cathode connection but adjacent to it as shown in Figures 2(a) to 2(f).
2. For variants 07, 14, 21, 28, 35, 42, 49, 56 and 63 terminal identification shall be by means of the physical configuration of the package as shown in Figure 2(g).
3. For variants 64 to 70 the cathode end shall be indicated by a 45° chamfer to the lead end as shown in Figure 2(h).

4. REQUIREMENTS

4.1 General

The complete requirements for procurement of the diodes specified herein shall be as stated in this specification and ESCC Generic Specification No. 5010 for Discrete Microwave Semiconductor Components. Deviations from the Generic Specification applicable to this specification only, are listed in Para. 4.2.

Deviations from the applicable Generic Specification and this Detail Specification, formally agreed with specific Manufacturers on the basis that the alternative requirements are equivalent to the ESCC requirements and do not affect the components' reliability, are listed in the appendices attached to this specification.

4.2 Deviations from generic specification

4.2.1 Deviations from Special In-process Controls

(a) Para. 5.2, Wafer Lot Acceptance : S.E.M. inspection shall be performed on 3 dice, after die separation.
(b) Para. 5.3, Wafer Screening (Chart II(a)) : Minority Carrier Lifetime shall be performed as an on-wafer measurement on a sample of 27 dice per wafer.

4.2.2 Deviations from Final Production Tests (Chart II(b))

(a) Para. 6.3, Pre-burn-in : Shall be performed in accordance with Para. 9.21(a) using the conditions specified in Table 5(a) of this specification for a duration of 48 hours minimum.
(b) Para 9.2.2, Die Shear : Individual forces need not be recorded and the minimum residual die area shall be ≥ 50% of the original die size.

4.2.3 Deviations from Burn-in and Electrical Measurements (Chart III(a))

(a) Para. 9.21, High Temperature Reverse Bias Burn-in : Shall be performed at 75% of rated V_R.

4.2.4 Deviations from Qualification Tests (Chart IV)

(a) Para. 9.2.4, Die-Shear : Individual forces need not be recorded and the minimum residual die area shall be ≥ 50% of the original die size.
(b) Para. 9.14, Vibration Test : Shall not be performed.
(c) Para. 9.15, Constant Acceleration : Shall not be performed.
(d) Para. 9.23, Special Testing : Shall not be performed.

4.2.5 Deviations from Lot Acceptance Tests (Chart V)

(a) Para. 9.14, Vibration : Shall not be performed.
(b) Para. 9.15, Constant Acceleration : Shall not be performed.
(c) Para. 9.23, Special Testing : Shall not be performed.

4.3 Mechanical and environmental requirements

4.3.1 Dimension Check

The dimensions of the diodes specified herein shall be checked. They shall conform to those shown in Figure 2.

4.3.2 Weight

The maximum weight of the diodes specified herein shall be as follows :
- Variants 01 to 06, 08 to 13, 15 to 20, 22 to 27, 29 to 34, 36 to 41, 43 to 48 and 64 to 70 : 0.02g.
- Variants 07, 14, 21, 28, 35, 42, 49, 56 and 63 : 0.15g

4.3.3 Terminal Strength

The requirements for terminal strength are specified in Section 9 of ESCC Generic Specification No. 5010. The test conditions shall be as follows :

(a) Condition : 'A' (tension).

Variants 01, 03 to 06, 08, 10 to 13, 15, 17 to 20, 22, 24 to 27, 29, 31 to 34, 36, 38 to 41, 43, 45 to 48 and 64 to 70:

- Force : 1.25 N
- Duration : 10 seconds

4.3.4 Bond Strength

The requirements for bond strength are specified in Section 9 of ESCC Generic Specification No. 5010. The test conditions shall be as follows :

(a) Condition : 'A' (tension).
(b) Separating Force : 0.03N minimum.

4.3.5 Die Shear

The requirements for die shear are specified in Section 9 of ESCC Generic Specification No. 5010. The test conditions shall be as follows :

(a) Semiconductor material remaining : 50% minimum.

4.3.6 High Temperature Stabilisation Bake

The requirements for high temperature stabilisation bake are specified in Section 9 of ESCC Generic Specification No. 5010. The temperature to be applied shall be + 175 (+0 –3)°C.

4.4 Materials and finishes

The materials and finishes shall be as specified herein. Where a definite material is not specified, a material which will enable the diodes specified herein to meet the performance requirements of this specification shall be used. Acceptance or approval of any constituent material shall not guarantee acceptance of the finished product.

4.4.1 Case

The case shall be hermetically sealed and have a ceramic body. The lid shall be welded or preform soldered.

4.4.2 Lead Materials and Finish

(a) For variants 01, 03 to 06, 08, 10 to 13, 15, 17 to 20, 22, 24 to 27, 29, 31 to 34, 36, 38 to 41, 43 and 45 to 48, the body and lid material shall be Type 'D' with Type '7' finish and the lead material shall be Type 'E' with Type '2' finish in accordance with the requirements of ESCC Basic Specification No 23500.
(b) For variants 02, 09, 16, 23, 30, 37 and 44, the body and lid material shall be Type 'D' with Type '7' finish in accordance with the requirements of ESCC Basic Specification No 23500.
(c) For variants 07, 14, 21, 28, 35, 42, 49, 56 and 63, the body material shall be Type 'A' with Type '7' finish and the lid material shall be Type 'D' with Type '7' finish in accordance with the requirements of ESCC Basic Specification No 23500.
(d) For variants 64 to 70, the lead material shall be Type 'D' with Type '7' finish in accordance with the requirements of ESCC Basic Specification No 23500.

4.5 Marking

4.5.1 General

The marking of components delivered to this specification shall be in accordance with the requirements of ESCC Basic Specification No. 21700 and the following paragraphs. When the component is too small to accommodate all of the marking specified, as much as space permits shall be marked and the marking information, in full, shall accompany the component in its primary package.

The information to be marked and the order of precedence, shall be as follows :
(a) Cathode Identification.
(b) The ESCC Component Number.
(c) Traceability Information.

4.5.2 Cathode Identification

Cathode Identification shall be as shown in Figures 2 and 3 of this specification.

4.5.3 The ESCC Component Number

Each component shall bear the ESCC Component Number which shall be constituted and marked as follows:

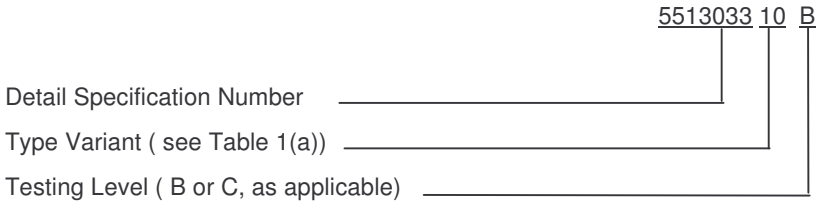

4.5.4 Traceability Information

Each component shall be marked in respect of traceability information as defined in ESCC Basic Specification No. 21700.

4.6 Electrical measurements

4.6.1 Electrical Measurements at Room Temperature

The parameters to be measured at room temperature are scheduled in Table 2. Unless otherwise specified, the measurements shall be performed at T_{amb} = + 22 ± 3°C.

4.6.2 Electrical Measurements at High and Low Temperatures

The parameters to be measured at high and low temperatures are scheduled in Table 3. Unless otherwise specified, the measurements shall be performed at + 150 °C (+0-3)°C.

4.6.3 Circuits for Electrical Measurements

Circuits for use in performed electrical measurements listed in Table 2 of this specification are shown in Figure 4.

4.7 Burn-in tests

Burn-in shall be Category 2 of Chart III (a) of Generic Specification N° 5010.

4.7.1 Parameters Drift Values

The parameter drift values applicable to burn-in are specified in Table 4 of this specification. Unless otherwise stated, the measurements shall be performed at T_{amb} = + 22 ± 3°C. The parameters drift values (Δ) applicable to the scheduled parameters shall not be exceeded. In addition to these drift value requirements for a given parameter, the appropriate limit value specified in Table 2 shall not be exceeded.

4.7.2 Conditions for High Temperature Reverse Bias Burn-in

The requirements for the High Temperature Reverse Bias Burn-in are specified in Section 7 of ESCC Generic Specification No. 5010. The conditions for High Temperature Reverse Bias Burn-in shall be as specified in Table 5(a) of this specification.

4.7.3 Conditions for Power Burn-in

The requirements of Power Burn-in are specified in Section 7 of ESCC Generic Specification No. 5010. The conditions for Power Burn-in shall be as specified in Table 5(b) of this specification.

4.7.4 Electrical Circuits for High Temperature Reverse Bias and Power Burn-in

Circuits for use in performing the High Temperature Reverse Bias Burn-in test are shown in Figures 5(a) and 5(b) of this specification.

TABLE 2(a) - ELECTRICAL MEASUREMENTS AT ROOM TEMPERATURE - DC PARAMETERS

No.	CHARACTERISTICS	SYMBOL	MIL-STD-750 TEST METHOD	TEST CONDITIONS	LIMITS		UNIT
					MIN.	MAX	
1	Reverse Current 1	I_{R1}	4016	V_R = - 200V	-	10	µA
2	Reverse Current 2	I_{R2}	4016	V_R = - 100V	-	500	nA
3	Forward Voltage	V_F	4011	I_F = 100 mA	-	1.1	V
4	Thermal Resistance	$R_{TH(J-C)}$	3101 Variants 01 to 06, 08 to 13, 15 to 20 and 64 to 70. Variants 07, 14, 21 to 27, 29 to 34, 36 to 41 and 43 to 48. Variants 28, 35, 42, 49, 56 and 63	Note 1 Power = 0.25 W Power = 0.5 W Power = 1.0 W	-	Note 2	°C/W

NOTES
1. Pulsed measurement, pulse width = 10ms.
2. See Item 4 of Table 1(b).

TABLE 2(b) - ELECTRICAL MEASUREMENTS AT ROOM TEMPERATURE - AC PARAMETERS

No.	CHARACTERISTICS	SYMBOL	TEST FIG.	MIL-STD-750 TEST METHOD	TEST CONDITIONS	LIMITS		UNIT
						MIN.	MAX	
5	Total Capacitance	C_T	-	4001	V_R = -50V f = 1 MHz	-	Note 1	pF
6	Forward Series Resistance	R_{SF}	-	4056	I_F = 10 mA f_0 = 120 MHz	-	Note 2	Ω
7	Minority Carrier Lifetime Note 3	τ_L	4(a)	-	I_F = 10 mA I_R = 6 mA	Note 4	-	ns

NOTES
1. See column 4 of Table 1(a). Junction capacitance = Total capacitance – Case capacitance.
   Typical case capacitance for cases in Figures 2(a) to 2(f) = 0.12 pF.
   Typical case capacitance for cases in Figure 2(g) = 0.18 pF.
   Typical case capacitance for cases in Figure 2(h) = 0.13 pF.
2. See column 5 of Table 1(a).
3. Only during Wafer Screening on a sample of 27 dice per wafer.
4. See Column 6 Table 1(a).

TABLE 3 - ELECTRICAL MEASUREMENTS AT HIGH AND LOW TEMPERATURES

No.	CHARACTERISTICS	SYMBOL	MIL-STD-750 TEST METHOD	TEST CONDITIONS	LIMITS		UNIT
					MIN.	MAX	
2	Reverse Current 2	I_{R2}	4016	V_R =-100V	-	50	µA

TABLE 4 - PARAMETER DRIFT VALUES

No.	CHARACTERISTICS	SYMBOL	SPEC. AND/OR TEST METHOD	TEST CONDITIONS	CHANGE LIMITS (Δ)	UNIT
2	Reverse Current 2	I_{R2}	As per Table 2	As per Table 2	± 50 (1) or (2) ± 100 (1)	nA %
3	Forward Voltage	V_F			± 5 (1)	%
5	Total Capacitance	C_T			± 5 (1) (3)	%

NOTES

1. Δ1 = Δ2 = Δ3.
2. Whichever is the greater, referred to the initial measurement.
3. Rounded upwards to the nearest 0.01 pF value. If C_T < 0.25 pF then Δ = ± 10%.

FIGURE 4 - CIRCUITS FOR ELECTRICAL MEASUREMENTS

FIGURE 4(a) - CIRCUIT FOR MESUREMENT OF MINORITY CARRIER LIFETIME

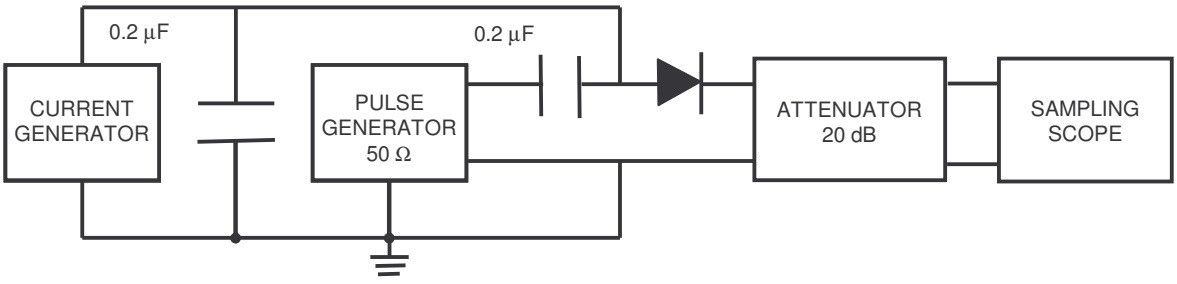

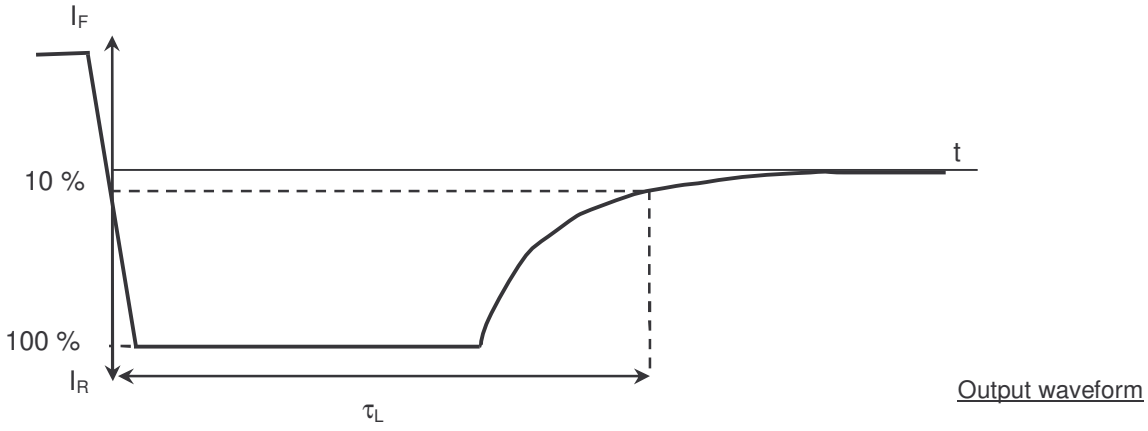

Output waveform

TABLE 5(a) - CONDITIONS FOR HIGH TEMPERATURE REVERSE BIAS BURN-IN

No	CHARACTERISTICS	SYMBOL	CONDITIONS	UNIT
1	Ambient Temperature	T_{amb}	+ 150 (-0 +3)	℃
2	Reverse Voltage	V_R	-150	V
3	Duration	t	Note 1	Hours

NOTES

1. See ESCC Generic Specification No. 5010.

TABLE 5(b) - CONDITIONS FOR POWER BURN-IN AND OPERATING LIFE TESTS

No	CHARACTERISTICS	SYMBOL	CONDITIONS	UNIT
1	Ambient Temperature	T_{amb}	+ 125 (-0 +3)	℃
2	Forward Current	I_F	Variants 64 to 70 : 30 Variants 01 to 06, 08 to 13 and 15 to 20 : 50 Variants 22 to 27, 29 to 34, 36 to 41 and 43 to 48 : 60 Variants 07, 14 and 21 : 80 Variants 28, 35, 42, 49 and 56 : 100 Variant 63 : 200	mA
3	Duration of Power Burn-In	t	Note 1	Hours
4	Duration of Operating Life Tests	t	Note 1	Hours

NOTES

1. See ESCC Generic Specification No. 5010.

FIGURE 5(a) - ELECTRICAL CIRCUIT FOR HIGH TEMPERATURE REVERSE BIAS BURN-IN

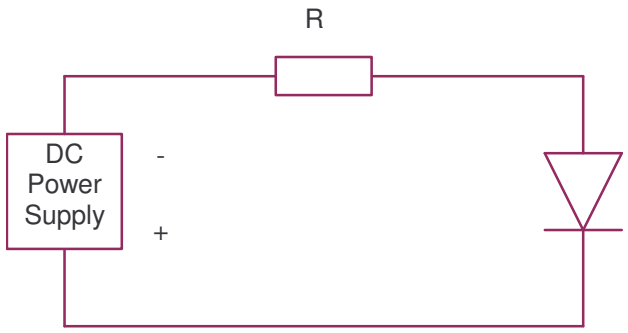

NOTES

1 : At the end of the HTRB, T_{amb} shall be decreased to room temperature and the reverse bias shall remain applied until T_{amb} < +35℃.

FIGURE 5(b) - ELECTRICAL CIRCUIT FOR POWER BURN-IN AND OPERATING LIFE TESTS

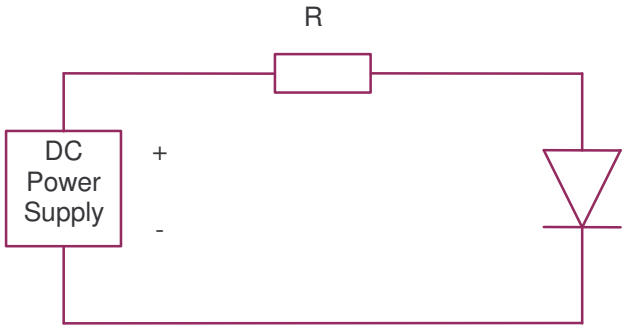

4.8 Environmental and endurance tests (Charts IV And V of ESCC Generic Specification No. 5010)

4.8.1 Electrical Measurements on Completion of Environmental Tests

The parameters to be measured on completion of environmental tests are scheduled in Table 2. Unless otherwise stated, the measurements shall be performed at T_{amb} = +22 ± 3°C.

4.8.2 Electrical Measurements at Intermediate Points and on Completion of Endurance Tests

The parameters to be measured at intermediate points and on completion of endurance tests are scheduled in Table 6. Unless otherwise stated, the measurements shall be performed at T_{amb} = +22 ± 3°C.

4.8.3 Conditions for Operating Life Tests (Part of Endurance Testing)

The requirements for operating life testing are specified in Section 9 of ESCC Generic Specification No. 5010. The conditions for operating life testing are specified in Table 5(b) of this specification.

4.8.4 Electrical Circuits for Operating Life Tests

The circuit to be used for performance of the operating life test shall be the same as shown in Figure 5(b) for Power Burn-in.

4.9 Total Dose Irradiation Testing

Not applicable.

4.10 Special testing

Not applicable.

TABLE 6 - ELECTRICAL MEASUREMENTS AT INTERMEDIATE POINTS AND ON COMPLETION OF ENDURANCE TESTING

No.	CHARACTERISTICS	SYMBOL	SPEC. AND/OR TEST METHOD	TEST CONDITIONS	LIMITS		UNIT
					MIN.	MAX.	
1	Reverse Current 1	I_{R1}	As per Table 2	As per Table 2	As per Table 2		µA
2	Reverse current 2	I_{R2}	As per Table 2	As per Table 2	As per Table 2		nA
3	Forward Voltage	V_F	As per Table 2	As per Table 2	As per Table 2		V
5	Total Capacitance	C_T	As per Table 2	As per Table 2	As per Table 2		pF

FIGURE 6 – BIAS CONDITIONS FOR IRRADATION TESTING

Not applicable

TABLE 7 – ELECTRICAL MEASUREMENTS DURING AND ON COMPLETION OF IRRADATION TESTING

Not applicable

APPENDIX 'A'

AGREED DEVIATIONS FOR CHELTON TELECOM & MICROWAVE (F)

ITEMS AFFECTED	DESCRIPTION OF DEVIATIONS
Para. 4.2.2	Para. 9.12, Radiographic Inspection of Chart III(a) : May be performed after Para. 9.7, Particle Impact Noise Detection (PIND) test, in X and Z axes only.
Para. 4.2.3	Para. 9.12, Radiographic Inspection : May be performed after Para. 9.7, PIND test of Chart II(b).

Pages 1 to 22

ORIGINAL

MICROWAVE, SILICON, PIN,

ULTRA FAST SWITCHING, DIODES,

BASED ON TYPES DH50101 to DH50107

ESCC Detail Specification No. 5513/038

MAY 2007

Issue / Rev.	Approved by		
	NAME	Date	VISA
3	R&D : S. PEREIRA	07/06/07	
	Production Management : S. CASSOU	08/06/07	
	Marketing : L. ETIENNE	11/06/07	
	Q.A : J-P. TETART	13-06-2007	

DOCUMENTATION CHANGE NOTICE

Rev. Letter	Rev. Date	CHANGE Reference / Item	Approved DCR No.
Issue 1 A	July 1997	Initial version	
Issue 2	January 2005	All Pages	
Issue 3	May 2007	(As agreed with ESA) All Pages	

TABLE OF CONTENTS

1. GENERAL 5

1.1 SCOPE 5
1.2 COMPONENT TYPE VARIANTS 5
1.3 MAXIMUM RATINGS 5
1.4 PARAMETERS DERATING INFORMATION 5
1.5 PHYSICAL DIMENSIONS 5
1.6 FUNCTIONAL DIAGRAM 5
1.7 HANDLING PRECAUTIONS 5

2. APPLICABLE DOCUMENTS 5

3. TERMS, DEFINITIONS, ABBREVIATIONS, SYMBOLS AND UNITS 5

4. REQUIREMENTS 14

4.1 GENERAL 14
4.2 DEVIATIONS FROM GENERIC SPECIFICATION 14
4.2.1 Deviations from Special In-process Controls 14
4.2.2 Deviations from Final Production Tests (Chart II(b)) 14
4.2.3 Deviations from Burn-in and Electrical Measurements (Chart III(a)) 14
4.2.4 Deviations from Qualification Tests (Chart IV) 14
4.2.5 Deviations from Lot Acceptance Tests (Chart V) 14
4.3 MECHANICAL AND ENVIRONMENTAL REQUIREMENTS 14
4.3.1 Dimension Check 14
4.3.2 Weight 14
4.3.3 Terminal Strength 15
4.3.4 Bond Strength 15
4.3.5 Die Shear 15
4.3.6 High Temperature Stabilisation Bake 15
4.4 MATERIALS AND FINISHES 15
4.4.1 Case 15
4.4.2 Lead Materials and Finish 15
4.5 MARKING 15
4.5.1 General 15
4.5.2 Cathode Identification 16
4.5.3 The ESCC Component Number 16
4.5.4 Traceability Information 16
4.6 ELECTRICAL MEASUREMENTS 16
4.6.1 Electrical Measurements at Room Temperature 16
4.6.2 Electrical Measurements at High and Low Temperatures 16
4.6.3 Circuits for Electrical Measurements 16
4.7 BURN-IN TESTS 16
4.7.1 Parameters Drift Values 16
4.7.2 Conditions for High Temperature Reverse Bias Burn-in 16
4.7.3 Conditions for Power Burn-in 16
4.7.4 Electrical Circuits for High Temperature Reverse Bias and Power Burn-in 16
4.8 ENVIRONMENTAL AND ENDURANCE TESTS (CHARTS IV AND V OF ESCC GENERIC SPECIFICATION NO. 5010) 20
4.8.1 Electrical Measurements on Completion of Environmental Tests 20
4.8.2 Electrical Measurements at Intermediate Points and on Completion of Endurance Tests 20
4.8.3 Conditions for Operating Life Tests (Part of Endurance Testing) 20
4.8.4 Electrical Circuits for Operating Life Tests 20
4.9 TOTAL DOSE IRRADIATION TESTING 20
4.10 SPECIAL TESTING 20

TABLES

1(a)	Type Variants	6
1(b)	Maximum Ratings	8
2(a)	Electrical Measurements at Room Temperature – D.C. Parameters	17
2(b)	Electrical Measurements at Room Temperature – A.C. Parameters	17
3	Electrical Measurements at High and Low Temperatures	17
4	Parameter drift Values	18
5(a)	Conditions for High Temperature Reverse Bias Burn-In	19
5(b)	Conditions for Power Burn-In and Operating Life Tests	19
6	Electrical Measurements at Intermediate Points and on Completion of Endurance Testing	21
7	Electrical Measurements During and on Completion of Irradiation Testing	21

FIGURES

1	Parameter Derating Information	9
2	Physical Dimensions	10
3	Functional Diagram	13
4	Circuits for Electrical Measurements	18
5(a)	Electrical circuit for High Temperature Reverse Bias Burn-in	19
5(b)	Electrical Circuit for Power Burn-in and Operating Life Tests	20
6	Bias Conditions for Irradiation Testing	21

APPENDICES (APPLICABLE TO SPECIFIC MANUFACTURERS ONLY)

'A'	Agreed Deviations for Chelton Telecom & Microwave (F)	22

1. GENERAL

1.1 Scope

This specification details the ratings, physical and electrical characteristics, test and inspection data for a Microwave Silicon PIN Ultra-Fast Switching Diode, based on Types DH50101 to DH50107. It shall be read in conjunction with ESCC Generic Specification No. 5010, the requirements of which are supplemented herein.

1.2 Component type variants

Variants of the basic diodes specified herein, which are also covered by this specification are given in Table 1(a).

1.3 Maximum ratings

The maximum ratings, which shall not be exceeded at any time during use or storage, applicable to the diodes specified herein, are as scheduled in Table 1(b).

1.4 Parameters derating information

The derating information applicable to the diodes specified herein is shown in Figure 1.

1.5 Physical dimensions

The physical dimensions of the diodes specified herein are shown in Figure 2.

1.6 Functional diagram

The functional diagram, showing lead identification, of the diodes specified herein, is shown in Figure 3.

1.7 Handling precautions

These devices are susceptible to be damaged by electrostatic discharge. Therefore, suitable precautions shall be employed for protection during all phases of manufacture, testing, packaging, shipment and any handling.

The components are categorised as Class 1 with a Minimum Critical Path Failure Voltage (MCPFV) of 500V.

2. APPLICABLE DOCUMENTS

The following documents form part of this specification and shall be read in conjunction with it :

(a) ESCC Generic Specification No. 5010 for Discrete Microwave Semiconductor Components.
(b) MIL-STD-750, Test Methods for Semiconductor Devices.

3. TERMS, DEFINITIONS, ABBREVIATIONS, SYMBOLS AND UNITS

For the purpose of this specification, the terms, definitions, abbreviations, symbols and units specified in ESCC Basic Specification No. 21300 shall apply. In addition the following symbols are used :

C_T = Total Capacitance.

TABLE 1(a) – TYPE VARIANTS

(1) VARIANT	(2) BASED ON TYPE	(3) FIGURE	(4) TOTAL CAPACITANCE C_T (pF) (Note 1) MAX	(5) FORWARD SERIES RESISTANCE R_{SF} (Ω) MAX	(6) MINORITY CARRIER LIFETIME τ_L (ns) MIN	(7) BODY-LID AND/OR LEAD MATERIAL AND FINISH
01	DH50101	2 (a)	0.19	1.9	300	D7 - E2
02		2 (b)				D7
03		2 (c)				D7 - E2
04		2 (d)				
05		2 (e)				
06		2 (f)				
07		2 (g)	0.26			A7 - D7
50		2 (h)	0.20			D7
08	DH50102	2 (a)	0.21	1.7	300	D7 - E2
09		2 (b)				D7
10		2 (c)				D7 - E2
11		2 (d)				
12		2 (e)				
13		2 (f)				
14		2 (g)	0.28			A7 - D7
51		2 (h)	0.22			D7
15	DH50103	2 (a)	0.25	1.4	400	D7 - E2
16		2 (b)				D7
17		2 (c)				D7 - E2
18		2 (d)				
19		2 (e)				
20		2 (f)				
21		2 (g)	0.32			A7 - D7
52		2 (h)	0.26			D7
22	DH50104	2 (a)	0.30	1.2	500	D7 - E2
23		2 (b)				D7
24		2 (c)				D7 - E2
25		2 (d)				
26		2 (e)				
27		2 (f)				
28		2 (g)	0.37			A7 - D7
53		2 (h)	0.31			D7

NOTES

1. V_R = - 6.0V, f = 1.0MHz

TABLE 1(a) – TYPE VARIANTS (CONTINUED)

(1) VARIANT	(2) BASED ON TYPE	(3) FIGURE	(4) TOTAL CAPACITANCE C_T (pF) (Note 1) MAX	(5) FORWARD SERIES RESISTANCE R_{SF} (Ω) MAX	(6) MINORITY CARRIER LIFETIME τ_L (ns) MIN	(7) BODY-LID AND/OR LEAD MATERIAL AND FINISH
29	DH50105	2 (a)	0.36	1.0	600	D7 - E2
30		2 (b)				D7
31		2 (c)				D7 - E2
32		2 (d)				
33		2 (e)				
34		2 (f)				
35		2 (g)	0.43			A7 - D7
54		2 (h)	0.37			D7
36	DH50106	2 (a)	0.53	0.8	800	D7 - E2
37		2 (b)				D7
38		2 (c)				D7 - E2
39		2 (d)				
40		2 (e)				
41		2 (f)				
42		2 (g)	0.60			A7 - D7
55		2 (h)	0.54			D7
43	DH50107	2 (a)	0.73	0.6	1000	D7 - E2
44		2 (b)				D7
45		2 (c)				D7 - E2
46		2 (d)				
47		2 (e)				
48		2 (f)				
49		2 (g)	0.80			A7 - D7
56		2 (h)	0.74			D7

NOTES

1. V_R = - 6.0V, f = 1.0MHz

TABLE 1(b) - MAXIMUM RATINGS

No.	CHARACTERISTIC	SYMBOL	MAXIMUM RATINGS	UNIT	REMARKS
1	D.C. Reverse Voltage	V_R	-100	V	I_R = 10 µA
2	D.C. Forward Current (Continuous) Variants 50 to 56 Variants 01 to 06, 08 to 13 and 15 to 20, Variants 22 to 27 and 29 to 34 Variants 36 to 41 and 43 to 48 Variants 07, 14, 21, 28 and 35 Variants 42 and 49	I_F	 **90** **150** **150** **180** **240** **300**	mA	Note 1
3	R.F. Power Dissipation Variants 50 to 56 Variants 01 to 06, 08 to 13 and 15 to 20, Variants 22 to 27 and 29 to 34 Variants 36 to 41 and 43 to 48 Variants 07, 14, 21, 28 and 35 Variants 42 and 49	P_{tOt}	 0.30 0.50 0.50 0.62 0.83 1.25	W	Note 1
4	Thermal Resistance (Junction to Case) Variants 50 to 56 Variants 01 to 06, 08 to 13 and 15 to 20, Variants 22 to 27 and 29 to 34 Variants 36 to 41 and 43 to 48 Variants 07, 14, 21, 28 and 35 Variants 42 and 49	$R_{TH(J-C)}$	 250 150 150 120 90 60	°C/W	-
5	Operating Temperature Range	T_{op}	-55 to +150	°C	T_{case}
6	Storage Temperature Range	T_{stg}	-65 to +175	°C	-
7	Soldering Temperature	T_{sol}	+ 230	°C	Note 2

NOTES

1. At T_{case} = + 75°C. For derating at T_{case} > + 75°C, see Figure 1.
2. Duration 5 seconds maximum and the same termination shall not be resoldered until 3 minutes have elapsed.

FIGURE 1 - PARAMETER DERATING INFORMATION

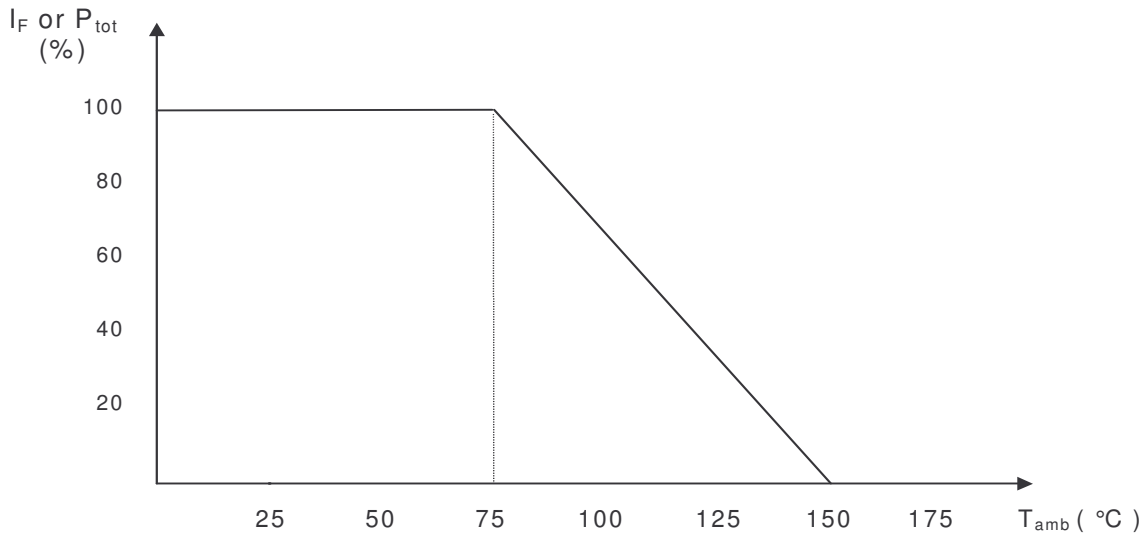

Forward Current or Power Dissipation versus Temperature

FIGURE 2 - PHYSICAL DIMENSIONS (CONTINUED)

FIGURE 2(c) – Variants 03, 10, 17, 24, 31, 38, 45

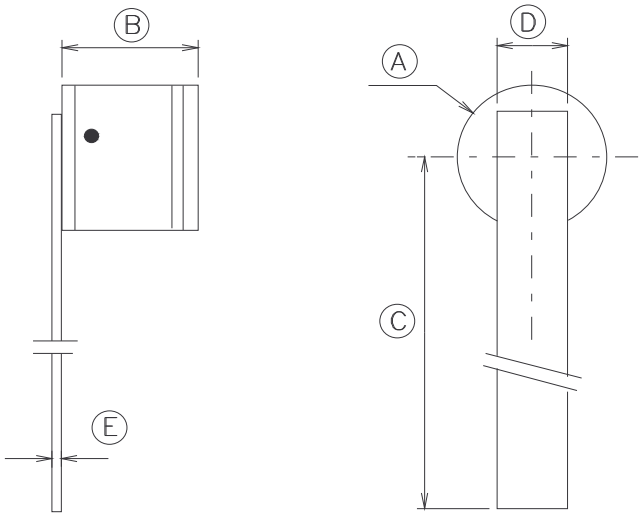

SYMBOL	MILLIMETERS	
	MIN.	MAX.
A	∅ 1.07	∅ 1.47
B	0.95	1.35
C	5.00	-
D	0.55	0.65
E	0.06	0.10

FIGURE 2(d) – Variants 04, 11, 18, 25, 32, 39, 46

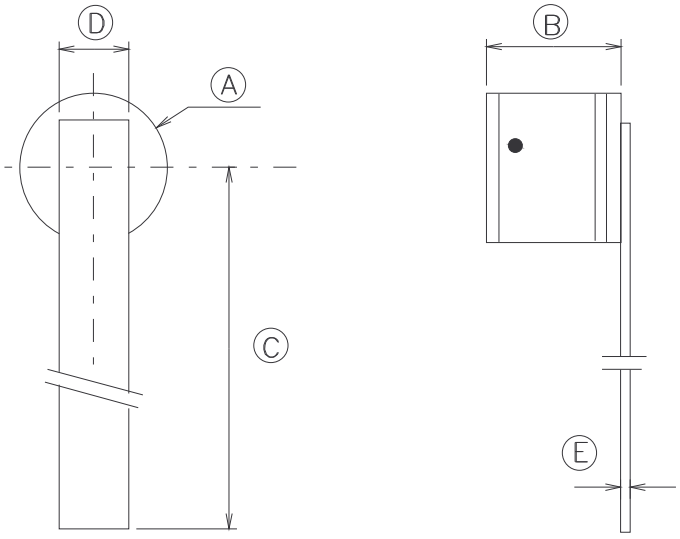

SYMBOL	MILLIMETERS	
	MIN.	MAX.
A	∅ 1.07	∅ 1.47
B	0.95	1.35
C	5.00	-
D	0.55	0.65
E	0.06	0.10

FIGURE 2 - PHYSICAL DIMENSIONS (CONTINUED)

FIGURE 2(e) – Variants 05, 12, 19, 26, 33, 40, 47

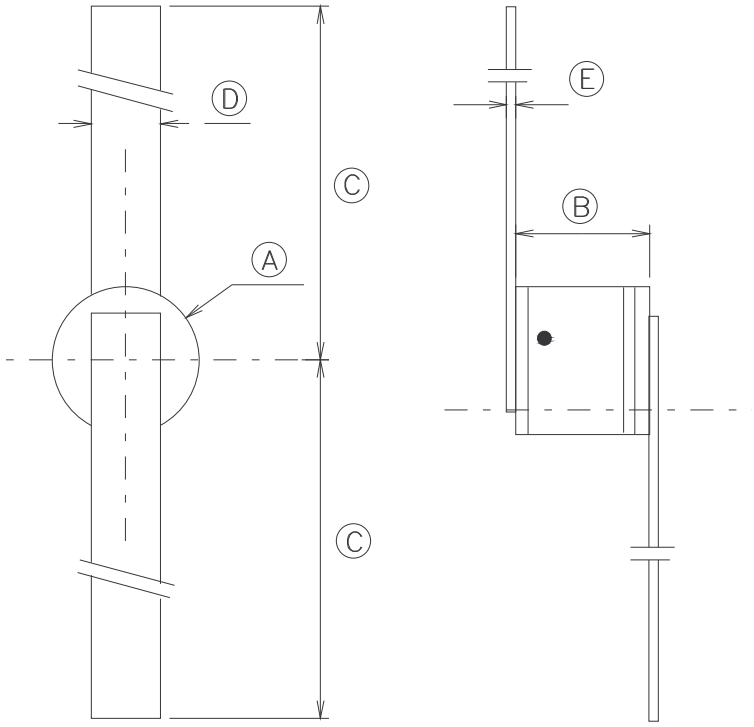

SYMBOL	MILLIMETERS	
	MIN.	MAX.
A	∅1.07	∅1.47
B	0.95	1.35
C	5.00	-
D	0.55	0.65
E	0.06	0.10

FIGURE 2(f) – Variants 06, 13, 20, 27, 34, 41, 48

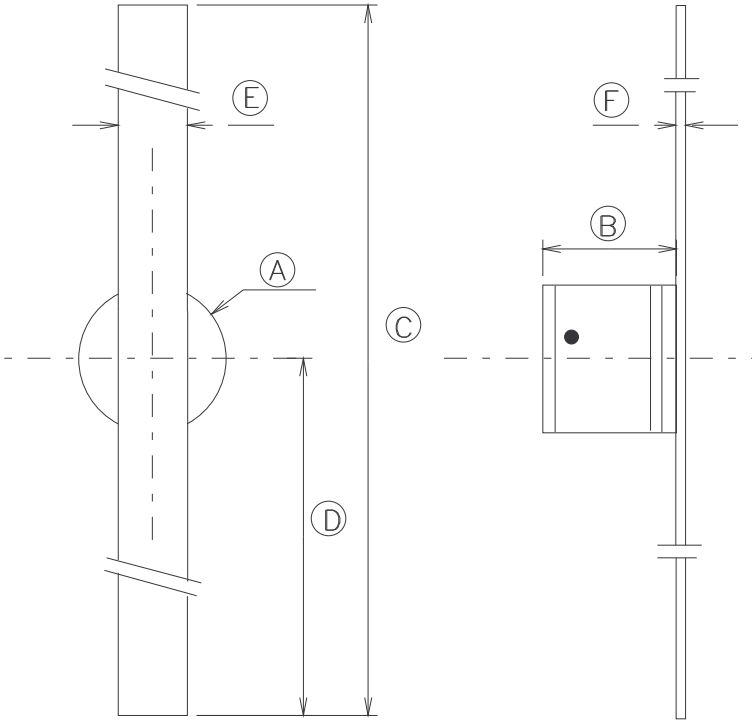

SYMBOL	MILLIMETERS	
	MIN.	MAX.
A	∅ 1.07	∅ 1.47
B	0.95	1.35
C	10.00	10.40
D	5.00	-
E	0.55	0.65
F	0.06	0.10

FIGURE 2 - PHYSICAL DIMENSIONS (CONTINUED)

FIGURE 2(g) – Variants 07, 14, 21, 28, 35, 42, 49

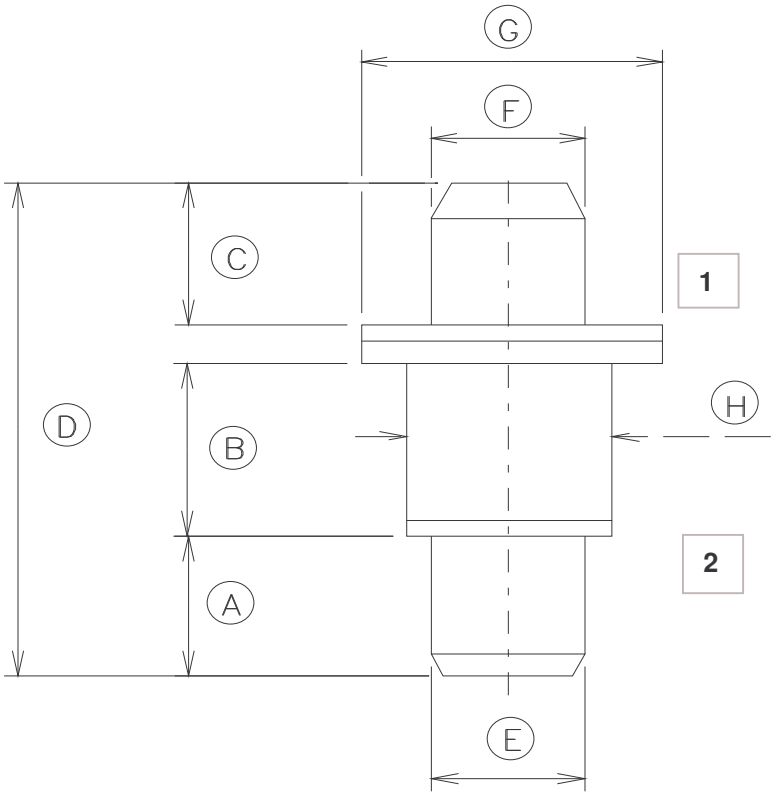

SYMBOL	MILLIMETERS	
	MIN.	MAX.
A	1.52	1.63
B	1.75	1.85
C	1.52	1.63
D	5.20	5.72
E	∅ 1.52	∅ 1.63
F	∅ 1.52	∅ 1.63
G	∅ 3.00	∅ 3.23
H	∅ 1.95	∅ 2.11

FIGURE 2 - PHYSICAL DIMENSIONS (CONTINUED)

FIGURE 2(h) – Variants 50 to 56

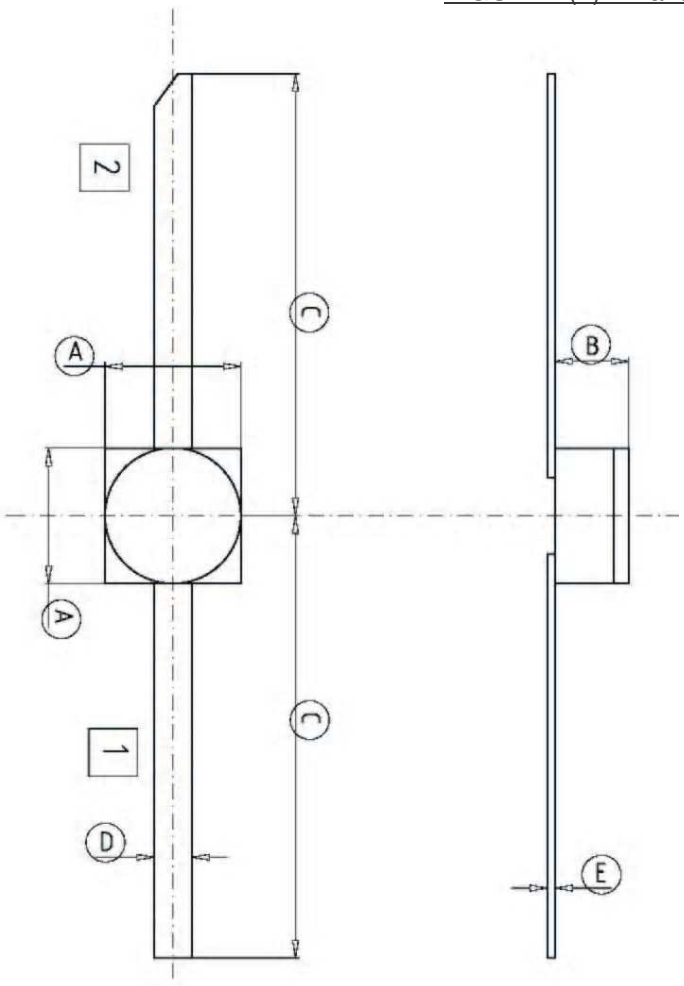

SYMBOL	MILLIMETERS	
	MIN.	MAX.
A	1.68	1.88
B	0.91	1.01
C	6.15	6.55
D	0.45	0.55
E	0.08	0.12

FIGURE 3 - FUNCTIONAL DIAGRAM



1 : Anode
2 : Cathode

NOTES

1. For variants 01 to 06, 08 to 13, 15 to 20, 22 to 27, 29 to 34, 36 to 41 and 43 to 48: The cathode end shall be marked with a black dot. The marking will not be on the cathode connection but adjacent to it as shown in Figures 2(a) to 2(f).
2. For variants 07, 14, 21, 28, 35, 42 and 49 terminal identification shall be by means of the physical configuration of the package as shown in Figure 2(g).
3. For variants 50 to 56 the cathode end shall be indicated by a 45° chamfer to the lead end as shown in Figure 2(h).

4. REQUIREMENTS

4.1 General

The complete requirements for procurement of the diodes specified herein shall be as stated in this specification and ESCC Generic Specification No. 5010 for Discrete Microwave Semiconductor Components. Deviations from the Generic Specification applicable to this specification only, are listed in Para. 4.2.

Deviations from the applicable Generic Specification and this Detail Specification, formally agreed with specific Manufacturers on the basis that the alternative requirements are equivalent to the ESCC requirements and do not affect the components' reliability, are listed in the appendices attached to this specification.

4.2 Deviations from generic specification

4.2.1 Deviations from Special In-process Controls

(a) Para. 5.2, Wafer Lot Acceptance : S.E.M. inspection shall be performed on 3 dice, after die separation.
(b) Para. 5.3, Wafer Screening (Chart II(a)) : Minority Carrier Lifetime shall be performed as an on-wafer measurement on a sample of 27 dice per wafer.

4.2.2 Deviations from Final Production Tests (Chart II(b))

(a) Para. 6.3, Pre-burn-in : Shall be performed in accordance with Para. 9.21(a) using the conditions specified in Table 5(a) of this specification for a duration of 48 hours minimum.
(b) Para 9.2.2, Die Shear : Individual forces need not be recorded and the minimum residual die area shall be ≥ 50% of the original die size.

4.2.3 Deviations from Burn-in and Electrical Measurements (Chart III(a))

(a) Para. 9.21, High Temperature Reverse Bias Burn-in : Shall be performed at 75% of rated V_R.

4.2.4 Deviations from Qualification Tests (Chart IV)

(a) Para. 9.2.4, Die-Shear : Individual forces need not be recorded and the minimum residual die area shall be ≥ 50% of the original die size.
(b) Para. 9.14, Vibration Test : Shall not be performed.
(c) Para. 9.15, Constant Acceleration : Shall not be performed.
(d) Para. 9.23, Special Testing : Shall not be performed.

4.2.5 Deviations from Lot Acceptance Tests (Chart V)

(a) Para. 9.14, Vibration : Shall not be performed.
(b) Para. 9.15, Constant Acceleration : Shall not be performed.
(c) Para. 9.23, Special Testing : Shall not be performed.

4.3 Mechanical and environmental requirements

4.3.1 Dimension Check

The dimensions of the diodes specified herein shall be checked. They shall conform to those shown in Figure 2.

4.3.2 Weight

The maximum weight of the diodes specified herein shall be as follows :
- Variants 01 to 06, 08 to 13, 15 to 20, 22 to 27, 29 to 34, 36 to 41, 43 to 48 and 50 to 56 : 0.02g.
- Variants 07, 14, 21, 28, 35, 42 and 49 : 0.15g

4.3.3 Terminal Strength

The requirements for terminal strength are specified in Section 9 of ESCC Generic Specification No. 5010. The test conditions shall be as follows :

(a) Condition : 'A' (tension).

Variants 01, 03 to 06, 08, 10 to 13, 15, 17 to 20, 22, 24 to 27, 29, 31 to 34, 36, 38 to 41, 43, 45 to 48 and 50 to 56:

- Force : 1.25 N
- Duration : 10 seconds

4.3.4 Bond Strength

The requirements for bond strength are specified in Section 9 of ESCC Generic Specification No. 5010. The test conditions shall be as follows :

(a) Condition : 'A' (tension).
(b) Separating Force : 0.03N minimum.

4.3.5 Die Shear

The requirements for die shear are specified in Section 9 of ESCC Generic Specification No. 5010. The test conditions shall be as follows :

(a) Semiconductor material remaining : 50% minimum.

4.3.6 High Temperature Stabilisation Bake

The requirements for high temperature stabilisation bake are specified in Section 9 of ESCC Generic Specification No. 5010. The temperature to be applied shall be + 175 (+0 –3)°C.

4.4 Materials and finishes

The materials and finishes shall be as specified herein. Where a definite material is not specified, a material which will enable the diodes specified herein to meet the performance requirements of this specification shall be used. Acceptance or approval of any constituent material shall not guarantee acceptance of the finished product.

4.4.1 Case

The case shall be hermetically sealed and have a ceramic body. The lid shall be welded or preform soldered.

4.4.2 Lead Materials and Finish

(a) For variants 01, 03 to 06, 08, 10 to 13, 15, 17 to 20, 22, 24 to 27, 29, 31 to 34, 36, 38 to 41, 43 and 45 to 48, the body and lid material shall be Type 'D' with Type '7' finish and the lead material shall be Type 'E' with Type '2' finish in accordance with the requirements of ESCC Basic Specification No 23500.
(b) For variants 02, 09, 16, 23, 30, 37 and 44, the body and lid material shall be Type 'D' with Type '7' finish in accordance with the requirements of ESCC Basic Specification No 23500.
(c) For variants 07, 14, 21, 28, 35, 42 and 49, the body material shall be Type 'A' with Type '7' finish and the lid material shall be Type 'D' with Type '7' finish in accordance with the requirements of ESCC Basic Specification No 23500.
(d) For variants 50 to 56, the lead material shall be Type 'D' with Type '7' finish in accordance with the requirements of ESCC Basic Specification No 23500.

4.5 Marking

4.5.1 General

The marking of components delivered to this specification shall be in accordance with the requirements of ESCC Basic Specification No. 21700 and the following paragraphs. When the component is too small to accommodate all of the marking specified, as much as space permits shall be marked and the marking information, in full, shall accompany the component in its primary package.

The information to be marked and the order of precedence, shall be as follows :
(a) Cathode Identification.
(b) The ESCC Component Number.
(c) Traceability Information.

4.5.2 Cathode Identification

Cathode Identification shall be as shown in Figures 2 and 3 of this specification.

4.5.3 The ESCC Component Number

Each component shall bear the ESCC Component Number which shall be constituted and marked as follows:

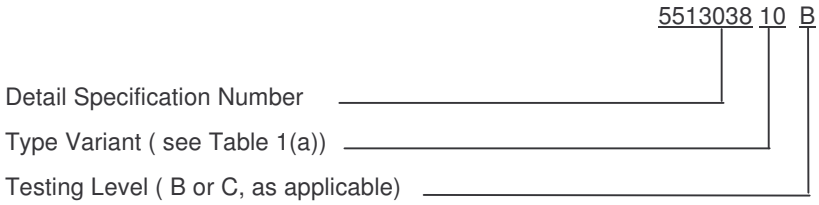

4.5.4 Traceability Information

Each component shall be marked in respect of traceability information as defined in ESCC Basic Specification No. 21700.

4.6 Electrical measurements

4.6.1 Electrical Measurements at Room Temperature

The parameters to be measured at room temperature are scheduled in Table 2. Unless otherwise specified, the measurements shall be performed at T_{amb} = + 22 ± 3°C.

4.6.2 Electrical Measurements at High and Low Temperatures

The parameters to be measured at high and low temperatures are scheduled in Table 3. Unless otherwise specified, the measurements shall be performed at + 150 °C (+0-3)°C.

4.6.3 Circuits for Electrical Measurements

Circuits for use in performed electrical measurements listed in Table 2 of this specification are shown in Figure 4.

4.7 Burn-in tests

Burn-in shall be Category 2 of Chart III (a) of Generic Specification N° 5010.

4.7.1 Parameters Drift Values

The parameter drift values applicable to burn-in are specified in Table 4 of this specification. Unless otherwise stated, the measurements shall be performed at T_{amb} = + 22 ± 3°C. The parameters drift values (Δ) applicable to the scheduled parameters shall not be exceeded. In addition to these drift value requirements for a given parameter, the appropriate limit value specified in Table 2 shall not be exceeded.

4.7.2 Conditions for High Temperature Reverse Bias Burn-in

The requirements for the High Temperature Reverse Bias Burn-in are specified in Section 7 of ESCC Generic Specification No. 5010. The conditions for High Temperature Reverse Bias Burn-in shall be as specified in Table 5(a) of this specification.

4.7.3 Conditions for Power Burn-in

The requirements of Power Burn-in are specified in Section 7 of ESCC Generic Specification No. 5010. The conditions for Power Burn-in shall be as specified in Table 5(b) of this specification.

4.7.4 Electrical Circuits for High Temperature Reverse Bias and Power Burn-in

Circuits for use in performing the High Temperature Reverse Bias Burn-in test are shown in Figures 5(a) and 5(b) of this specification.

TABLE 2(a) - ELECTRICAL MEASUREMENTS AT ROOM TEMPERATURE - DC PARAMETERS

No.	CHARACTERISTICS	SYMBOL	MIL-STD-750 TEST METHOD	TEST CONDITIONS	LIMITS		UNIT
					MIN.	MAX	
1	Reverse Current 1	I_{R1}	4016	V_R = - 100V	-	10	µA
2	Reverse Current 2	I_{R2}	4016	V_R = - 50V	-	100	nA
3	Forward Voltage	V_F	4011	I_F = 100 mA	-	1.1	V
4	Thermal Resistance	$R_{TH(J-C)}$	3101 Variants 01 to 06, 08 to 13, 15 to 20, 22 to 27, 29 to 34, and 50 to 56. Variant 07, 14, 21, 28, 35 to 41 and 43 to 48. Variant 42 and 49.	Note 1 Power = 0.25 W Power = 0.50 W Power = 1.00 W	-	Note 2	°C/W

NOTES
1. Pulsed measurement, pulse width = 10ms.
2. See Item 4 of Table 1(b).

TABLE 2(b) - ELECTRICAL MEASUREMENTS AT ROOM TEMPERATURE - AC PARAMETERS

No.	CHARACTERISTICS	SYMBOL	TEST FIG.	MIL-STD-750 TEST METHOD	TEST CONDITIONS	LIMITS		UNIT
						MIN.	MAX	
5	Total Capacitance	C_T	-	4001	V_R = -6.0V f = 1 MHz	-	Note 1	pF
6	Forward Series Resistance	R_{SF}	-	4056	I_F = 10 mA f_0 = 120 MHz	-	Note 2	Ω
7	Minority Carrier Lifetime Note 3	τ_L	4(a)	-	I_F = 10 mA I_R = 6 mA	-	Note 4	ns

NOTES
1. See column 4 of Table 1(a). Junction capacitance = Total capacitance – Case capacitance.
   Typical case capacitance for cases in Figures 2(a) to 2(f) = 0.12 pF.
   Typical case capacitance for cases in Figure 2(g) = 0.18 pF.
   Typical case capacitance for cases in Figure 2(h) = 0.13 pF.
2. See column 5 of Table 1(a).
3. Only during Wafer Screening on a sample of 27 dice per wafer.
4. See Column 6 Table 1(a).

TABLE 3 - ELECTRICAL MEASUREMENTS AT HIGH AND LOW TEMPERATURES

No.	CHARACTERISTICS	SYMBOL	MIL-STD-750 TEST METHOD	TEST CONDITIONS	LIMITS		UNIT
					MIN.	MAX	
2	Reverse Current 2	I_{R2}	4016	V_R = - 50V	-	1.0	µA

TABLE 4 - PARAMETER DRIFT VALUES

No.	CHARACTERISTICS	SYMBOL	SPEC. AND/OR TEST METHOD	TEST CONDITIONS	CHANGE LIMITS (Δ)	UNIT
2	Reverse Current 2	I_{R2}	As per Table 2	As per Table 2	± 10 (1) or (2) ± 100 (1)	nA %
3	Forward Voltage	V_F			± 5 (1)	%
5	Total Capacitance	C_T			± 5 (1) (3)	%

NOTES

1. Δ1 = Δ2 = Δ3.
2. Whichever is the greater, referred to the initial measurement.
3. Rounded upwards to the nearest 0.01 pF value. If C_T < 0.25 pF then Δ = ± 10%.

FIGURE 4 - CIRCUITS FOR ELECTRICAL MEASUREMENTS

FIGURE 4(a) - CIRCUIT FOR MESUREMENT OF MINORITY CARRIER LIFETIME

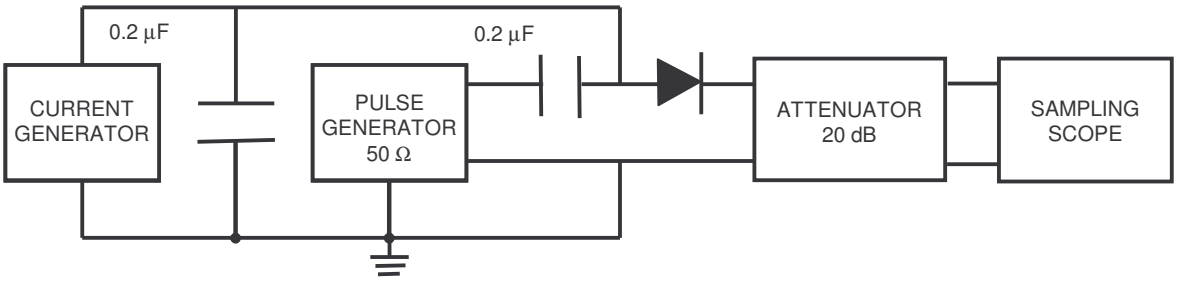

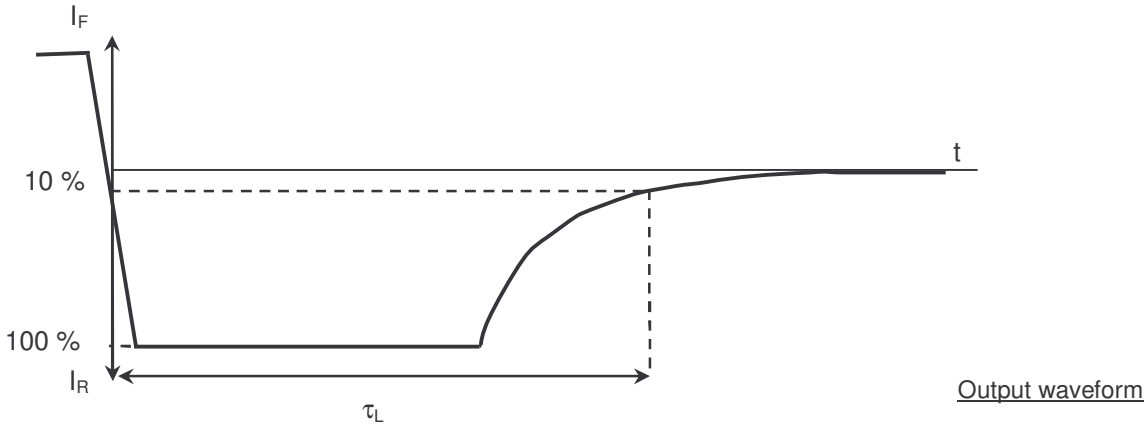

Output waveform

TABLE 5(a) - CONDITIONS FOR HIGH TEMPERATURE REVERSE BIAS BURN-IN

No	CHARACTERISTICS	SYMBOL	CONDITIONS	UNIT
1	Ambient Temperature	T_{amb}	+ 150 (-0 +3)	℃
2	Reverse Voltage	V_R	- 75	V
3	Duration	t	Note 1	Hours

NOTES

1. See ESCC Generic Specification No. 5010.

TABLE 5(b) - CONDITIONS FOR POWER BURN-IN AND OPERATING LIFE TESTS

No	CHARACTERISTICS	SYMBOL	CONDITIONS	UNIT
1	Ambient Temperature	T_{amb}	+ 125 (-0 +3)	℃
2	Forward Current	I_F	Variants 50 to 56 : 30 Variants 01 to 06, 08 to 13 and 15 to 20 : 50 Variants 22 to 27 and 29 to 34 : 50 Variants 36 to 41 and 43 to 48 : 60 Variants 07, 14, 21, 28 and 35 : 80 Variants 42 and 49 : 100	mA
3	Duration of Power Burn-In	t	Note 1	Hours
4	Duration of Operating Life Tests	t	Note 1	Hours

NOTES

1. See ESCC Generic Specification No. 5010.

FIGURE 5(a) - ELECTRICAL CIRCUIT FOR HIGH TEMPERATURE REVERSE BIAS BURN-IN

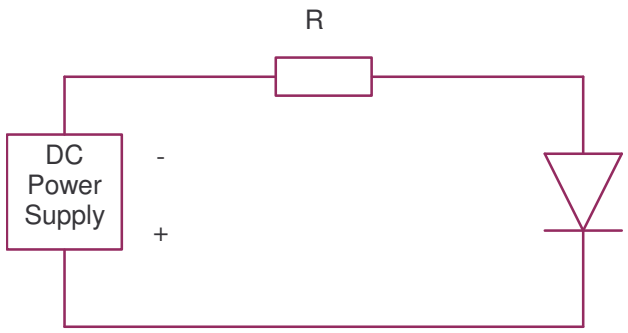

NOTES

1 : At the end of the HTRB, T_{amb} shall be decreased to room temperature and the reverse bias shall remain applied until T_{amb} < +35℃.

FIGURE 5(b) - ELECTRICAL CIRCUIT FOR POWER BURN-IN AND OPERATING LIFE TESTS

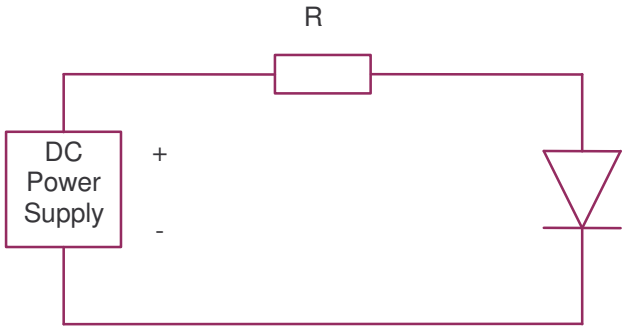

4.8 Environmental and endurance tests (Charts IV And V of ESCC Generic Specification No. 5010)

4.8.1 Electrical Measurements on Completion of Environmental Tests

The parameters to be measured on completion of environmental tests are scheduled in Table 2. Unless otherwise stated, the measurements shall be performed at T_{amb} = +22 ± 3°C.

4.8.2 Electrical Measurements at Intermediate Points and on Completion of Endurance Tests

The parameters to be measured at intermediate points and on completion of endurance tests are scheduled in Table 6. Unless otherwise stated, the measurements shall be performed at T_{amb} = +22 ± 3°C.

4.8.3 Conditions for Operating Life Tests (Part of Endurance Testing)

The requirements for operating life testing are specified in Section 9 of ESCC Generic Specification No. 5010. The conditions for operating life testing are specified in Table 5(b) of this specification.

4.8.4 Electrical Circuits for Operating Life Tests

The circuit to be used for performance of the operating life test shall be the same as shown in Figure 5(b) for Power Burn-in.

4.9 Total Dose Irradiation Testing

Not applicable.

4.10 Special testing

Not applicable.

TABLE 6 - ELECTRICAL MEASUREMENTS AT INTERMEDIATE POINTS AND ON COMPLETION OF ENDURANCE TESTING

No.	CHARACTERISTICS	SYMBOL	SPEC. AND/OR TEST METHOD	TEST CONDITIONS	LIMITS		UNIT
					MIN.	MAX.	
1	Reverse Current 1	I_{R1}	As per Table 2	As per Table 2	As per Table 2		µA
2	Reverse current 2	I_{R2}	As per Table 2	As per Table 2	As per Table 2		nA
3	Forward Voltage	V_F	As per Table 2	As per Table 2	As per Table 2		V
5	Total Capacitance	C_T	As per Table 2	As per Table 2	As per Table 2		pF

FIGURE 6 – BIAS CONDITIONS FOR IRRADATION TESTING

Not applicable

TABLE 7 – ELECTRICAL MEASUREMENTS DURING AND ON COMPLETION OF IRRADATION TESTING

Not applicable

APPENDIX 'A'

AGREED DEVIATIONS FOR CHELTON TELECOM & MICROWAVE (F)

ITEMS AFFECTED	DESCRIPTION OF DEVIATIONS
Para. 4.2.2	Para. 9.12, Radiographic Inspection of Chart III(a) : May be performed after Para. 9.7, Particle Impact Noise Detection (PIND) test, in X and Z axes only.
Para. 4.2.3	Para. 9.12, Radiographic Inspection : May be performed after Para. 9.7, PIND test of Chart II(b).

Pages 1 to 22

ORIGINAL

MICROWAVE, SILICON, PIN,

ULTRA FAST SWITCHING, DIODES,

BASED ON TYPES DH50052 to DH50057

ESCC Detail Specification No. 5513/036

MAY 2007

Issue / Rev.	Approved by		
	NAME	Date	VISA
3	R&D : S. PEREIRA	07/06/07	
	Production Management : S. CASSOU	08/06/07	
	Marketing : L. ETIENNE	11/06/07	
	Q.A : J-P. TETART	13-06-2007	

DOCUMENTATION CHANGE NOTICE

Rev. Letter	Rev. Date	CHANGE Reference / Item	Approved DCR No.
Issue 1 A	July 1997	Initial version	
Issue 2	January 2005	All Pages	
Issue 3	May 2007	(As agreed with ESA) All Pages	

TABLE OF CONTENTS

1. GENERAL 5

1.1 SCOPE 5
1.2 COMPONENT TYPE VARIANTS 5
1.3 MAXIMUM RATINGS 5
1.4 PARAMETERS DERATING INFORMATION 5
1.5 PHYSICAL DIMENSIONS 5
1.6 FUNCTIONAL DIAGRAM 5
1.7 HANDLING PRECAUTIONS 5

2. APPLICABLE DOCUMENTS 5

3. TERMS, DEFINITIONS, ABBREVIATIONS, SYMBOLS AND UNITS 5

4. REQUIREMENTS 14

4.1 GENERAL 14
4.2 DEVIATIONS FROM GENERIC SPECIFICATION 14
4.2.1 Deviations from Special In-process Controls 14
4.2.2 Deviations from Final Production Tests (Chart II) 14
4.2.3 Deviations from Burn-in and Electrical Measurements (Chart III) 14
4.2.4 Deviations from Qualification Tests (Chart IV) 14
4.2.5 Deviations from Lot Acceptance Tests (Chart V) 14
4.3 MECHANICAL AND ENVIRONMENTAL REQUIREMENTS 14
4.3.1 Dimension Check 14
4.3.2 Weight 14
4.3.3 Terminal Strength 15
4.3.1 Bond Strength 15
4.3.2 Die Shear 15
4.3.1 High Temperature Stabilisation Bake 15
4.4 MATERIAL AND FINISHES 15
4.4.1 Case 15
4.4.2 Lead Material and Finish 15
4.5 MARKING 15
4.5.1 General 15
4.5.2 Cathode Identification 16
4.5.3 The ESCC Component Number 16
4.5.4 Traceability Information 16
4.6 ELECTRICAL MEASUREMENTS 16
4.6.1 Electrical Measurements at Room Temperature 16
4.6.2 Electrical Measurements at High and Low Temperatures 16
4.6.3 Circuits for Elestrical Measurements 16
4.7 BURN-IN TESTS 16
4.7.1 Parameter Drift Values 16
4.7.2 Conditions for High Temperature Reverse Bias Burn-in 16
4.7.3 Conditions for Power Burn-in 16
4.7.4 Electrical Circuits for High Temperature Reverse Bias and Power Burn-in 16
4.8 ENVIRONMENTAL AND ENDURANCE TESTS (CHARTS IV AND V OF ESCC GENERIC SPECIFICATION NO. 5010) 20
4.8.1 Electrical Measurements on Completion of Environmental Tests 20
4.8.2 Electrical Measurements at Intermediate Points and on Completion of Endurance Tests 20
4.8.3 Conditions for Operating Life Tests (Part of Endurance Testing) 20
4.8.4 Electrical Circuits for Operating Life Tests 20
4.9 TOTAL DOSE IRRADIATION TESTING 20
4.10 SPECIAL TESTING 20

TABLES

1(a)	Type Variants	6
1(b)	Maximum Ratings	8
2(a)	Electrical Measurements at Room Temperature – D.C. Parameters	17
2(b)	Electrical Measurements at Room Temperature – A.C. Parameters	17
3	Electrical Measurements at High and Low Temperatures	17
4	Parameter drift Values	18
5(a)	Conditions for High Temperature Reverse Bias Burn-In	19
5(b)	Conditions for Power Burn-In and Operating Life Tests	19
6	Electrical Measurements at Intermediate Points and on Completion of Endurance Testing	21
7	Electrical Measurements During and on Completion of Irradiation Testing	21

FIGURES

1	Parameter Derating Information	8
2	Physical Dimensions	9
3	Functional Diagram	13
4	Circuits for Electrical Measurements	18
5(a)	Electrical circuit for High Temperature Reverse Bias Burn-in	19
5(b)	Electrical Circuit for Power Burn-in and Operating Life Tests	20
6	Bias Conditions for Irradiation Testing	21

APPENDICES (APPLICABLE TO SPECIFIC MANUFACTURERS ONLY)

'A'	Agreed Deviations for Chelton Telecom & Microwave (F)	22

1. GENERAL

1.1 Scope

This specification details the ratings, physical and electrical characteristics, test and inspection data for a Microwave Silicon PIN Ultra-Fast Switching Diode, based on Types DH50052 to DH50057. It shall be read in conjunction with ESCC Generic Specification No. 5010, the requirements of which are supplemented herein.

1.2 Component type variants

Variants of the basic diodes specified herein, which are also covered by this specification are given in Table 1(a).

1.3 Maximum ratings

The maximum ratings, which shall not be exceeded at any time during use or storage, applicable to the diodes specified herein, are as scheduled in Table 1(b).

1.4 Parameters derating information

The derating information applicable to the diodes specified herein is shown in Figure 1.

1.5 Physical dimensions

The physical dimensions of the diodes specified herein are shown in Figure 2.

1.6 Functional diagram

The functional diagram, showing lead identification, of the diodes specified herein, is shown in Figure 3.

1.7 Handling precautions

These devices are susceptible to be damaged by electrostatic discharge. Therefore, suitable precautions shall be employed for protection during all phases of manufacture, testing, packaging, shipment and any handling.

The components are categorised as Class 1 with a Minimum Critical Path Failure Voltage (MCPFV) of 500V.

2. APPLICABLE DOCUMENTS

The following documents form part of this specification and shall be read in conjunction with it :

(a) ESCC Generic Specification No. 5010 for Discrete Microwave Semiconductor Components.
(b) MIL-STD-750, Test Methods for Semiconductor Devices.

3. TERMS, DEFINITIONS, ABBREVIATIONS, SYMBOLS AND UNITS

For the purpose of this specification, the terms, definitions, abbreviations, symbols and units specified in ESCC Basic Specification No. 21300 shall apply. In addition the following symbols are used :

C_T = Total Capacitance.

TABLE 1(a) – TYPE VARIANTS

(1) VARIANT	(2) BASED ON TYPE	(3) FIGURE	(4) TOTAL CAPACITANCE C_T (pF) (Note 1) MAX	(5) FORWARD SERIES RESISTANCE R_{SF} (Ω) MAX	(6) MINORITY CARRIER LIFETIME τ_L (ns) MIN	(7) BODY-LID AND/OR LEAD MATERIAL AND FINISH
01	DH50052	2 (a)	0.21	1.6	60	D7 - E2
02		2 (b)				D7
03		2 (c)				D7 - E2
04		2 (d)				
05		2 (e)				
06		2 (f)				
07		2 (g)	0.28			A7 - D7
43		2 (h)	0.22			D7
08	DH50053	2 (a)	0.25	1.4	60	D7 - E2
09		2 (b)				D7
10		2 (c)				D7 - E2
11		2 (d)				
12		2 (e)				
13		2 (f)				
14		2 (g)	0.32			A7 - D7
44		2 (h)	0.26			D7
15	DH50054	2 (a)	0.30	1.1	70	D7 - E2
16		2 (b)				D7
17		2 (c)				D7 - E2
18		2 (d)				
19		2 (e)				
20		2 (f)				
21		2 (g)	0.37			A7 - D7
45		2 (h)	0.31			D7
22	DH50055	2 (a)	0.36	1.0	80	D7 - E2
23		2 (b)				D7
24		2 (c)				D7 - E2
25		2 (d)				
26		2 (e)				
27		2 (f)				
28		2 (g)	0.43			A7 - D7
46		2 (h)	0.37			D7

NOTES

1. V_R = - 6.0V, f = 1.0MHz

TABLE 1(a) – TYPE VARIANTS (CONTINUED)

(1) VARIANT	(2) BASED ON TYPE	(3) FIGURE	(4) TOTAL CAPACITANCE C_T (pF) (Note 1) MAX	(5) FORWARD SERIES RESISTANCE R_{SF} (Ω) MAX	(6) MINORITY CARRIER LIFETIME τ_L (ns) MIN	(7) BODY-LID AND/OR LEAD MATERIAL AND FINISH
29	DH50056	2 (a)	0.53	0.9	100	D7 - E2
30		2 (b)				D7
31		2 (c)				D7 - E2
32		2 (d)				
33		2 (e)				
34		2 (f)				
35		2 (g)	0.60			A7 - D7
47		2 (h)	0.54			D7
36	DH50057	2 (a)	0.73	0.7	120	D7 - E2
37		2 (b)				D7
38		2 (c)				D7 - E2
39		2 (d)				
40		2 (e)				
41		2 (f)				
42		2 (g)	0.80			A7 - D7
48		2 (h)	0.74			D7

NOTES

1. V_R = - 6.0V, f = 1.0MHz

TABLE 1(b) - MAXIMUM RATINGS

No.	CHARACTERISTIC	SYMBOL	MAXIMUM RATINGS	UNIT	REMARKS
1	D.C. Reverse Voltage	V_R	-50	V	I_R = 10 µA
2	D.C. Forward Current (Continuous) Variants 43 to 48 Variants 01 to 06, 08 to 13 and 15 to 20, Variants 22 to 27, 29 to 34 and 36 to 41 Variants 07 and 14 Variants 21, 28, 35 and 42	I_F	 **90** **150** **150** **180** **240**	mA	Note 1
3	R.F. Power Dissipation Variants 43 to 48 Variants 01 to 06, 08 to 13 and 15 to 20, Variants 22 to 27, 29 to 34 and 36 to 41 Variants 07 and 14 Variants 21, 28, 35 and 42	P_{tOt}	 0.30 0.50 0.50 0.62 0.83	W	Note 1
4	Thermal Resistance (Junction to Case) Variants 43 to 48 Variants 01 to 06, 08 to 13 and 15 to 20, Variants 22 to 27, 29 to 34 and 36 to 41 Variants 07 and 14 Variants 21, 28, 35 and 42	$R_{TH(J-C)}$	 250 150 150 120 90	℃/W	-
5	Operating Temperature Range	T_{op}	-55 to +150	℃	T_{case}
6	Storage Temperature Range	T_{stg}	-65 to +175	℃	-
7	Soldering Temperature	T_{sol}	+ 230	℃	Note 2

NOTES

1. At T_{case} = + 75℃. For derating at T_{case} > + 75℃, see Figure 1.
2. Duration 5 seconds maximum and the same termination shall not be resoldered until 3 minutes have elapsed.

FIGURE 1 - PARAMETER DERATING INFORMATION

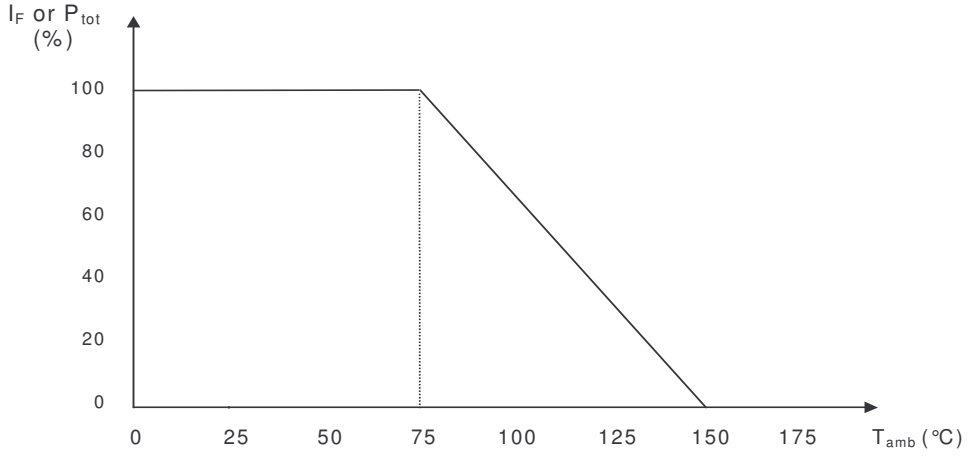

Forward Current or Power Dissipation versus Temperature

FIGURE 2 - PHYSICAL DIMENSIONS

FIGURE 2(a) – Variants 01, 08, 15, 22, 29, 36

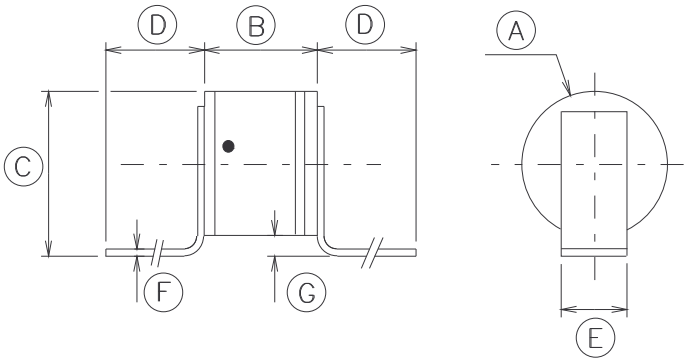

SYMBOL	MILLIMETERS	
	MIN.	MAX.
A	∅ 1.07	∅ 1.47
B	0.95	1.35
C	1.30	1.90
D	2.50	-
E	0.55	0.65
F	0.06	0.10
G	0.10	0.50

FIGURE 2(b) – Variants 02, 09, 16, 23, 30, 37

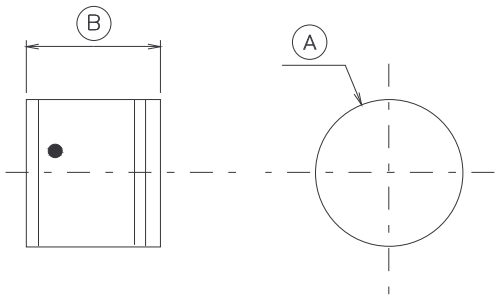

SYMBOL	MILLIMETERS	
	MIN.	MAX.
A	∅ 1.07	∅ 1.47
B	0.95	1.35

FIGURE 2 - PHYSICAL DIMENSIONS (CONTINUED)

FIGURE 2(c) – Variants 03, 10, 17, 24, 31, 38

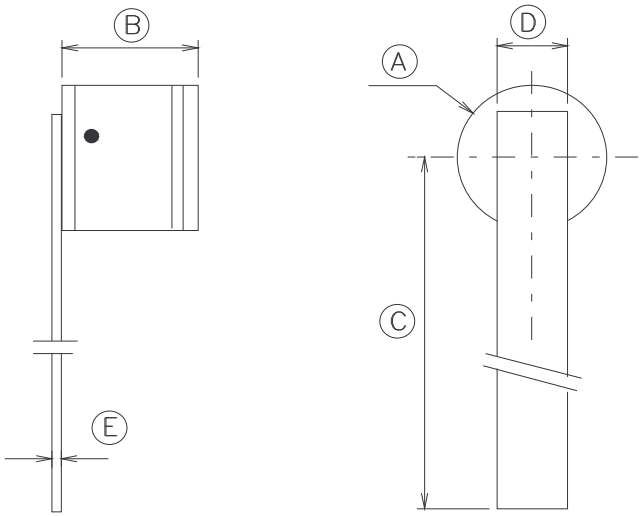

SYMBOL	MILLIMETERS	
	MIN.	MAX.
A	∅ 1.07	∅ 1.47
B	0.95	1.35
C	5.00	-
D	0.55	0.65
E	0.06	0.10

FIGURE 2(d) – Variants 04, 11, 18, 25, 32, 39

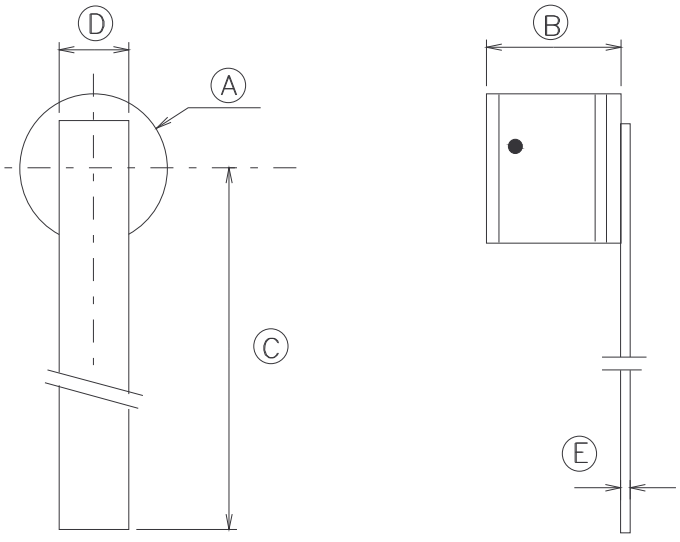

SYMBOL	MILLIMETERS	
	MIN.	MAX.
A	∅ 1.07	∅ 1.47
B	0.95	1.35
C	5.00	-
D	0.55	0.65
E	0.06	0.10

FIGURE 2 - PHYSICAL DIMENSIONS (CONTINUED)

FIGURE 2(e) – Variants 05, 12, 19, 26, 33, 40

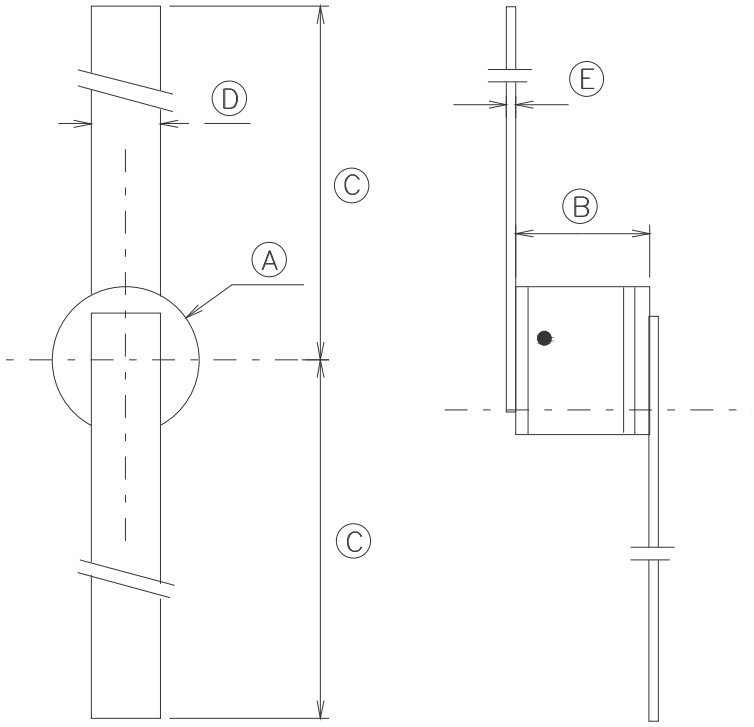

SYMBOL	MILLIMETERS	
	MIN.	MAX.
A	∅1.07	∅1.47
B	0.95	1.35
C	5.00	-
D	0.55	0.65
E	0.06	0.10

FIGURE 2(f) – Variants 06, 13, 20, 27, 34, 41

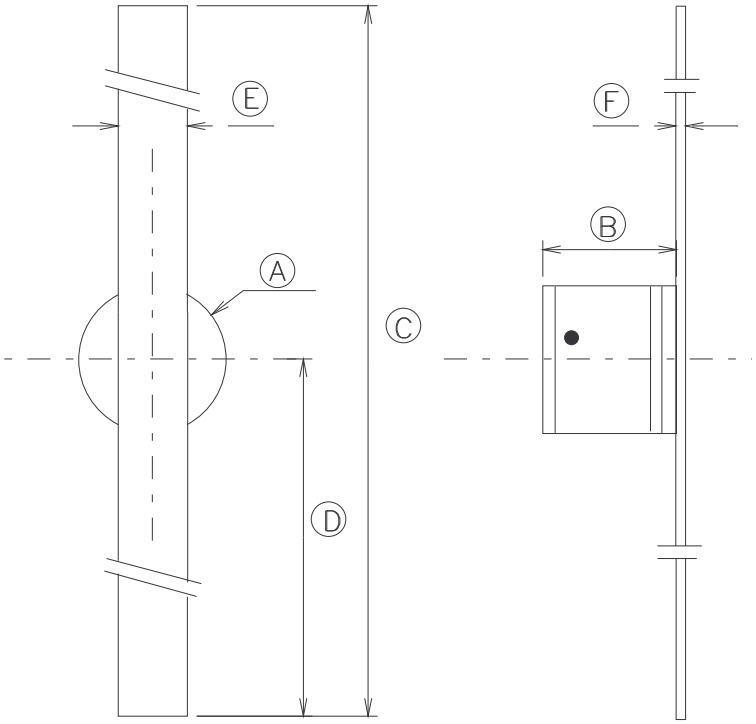

SYMBOL	MILLIMETERS	
	MIN.	MAX.
A	∅ 1.07	∅ 1.47
B	0.95	1.35
C	10.00	10.40
D	5.00	-
E	0.55	0.65
F	0.06	0.10

FIGURE 2 - PHYSICAL DIMENSIONS (CONTINUED)

FIGURE 2(g) – Variants 07, 14, 21, 28, 35, 42

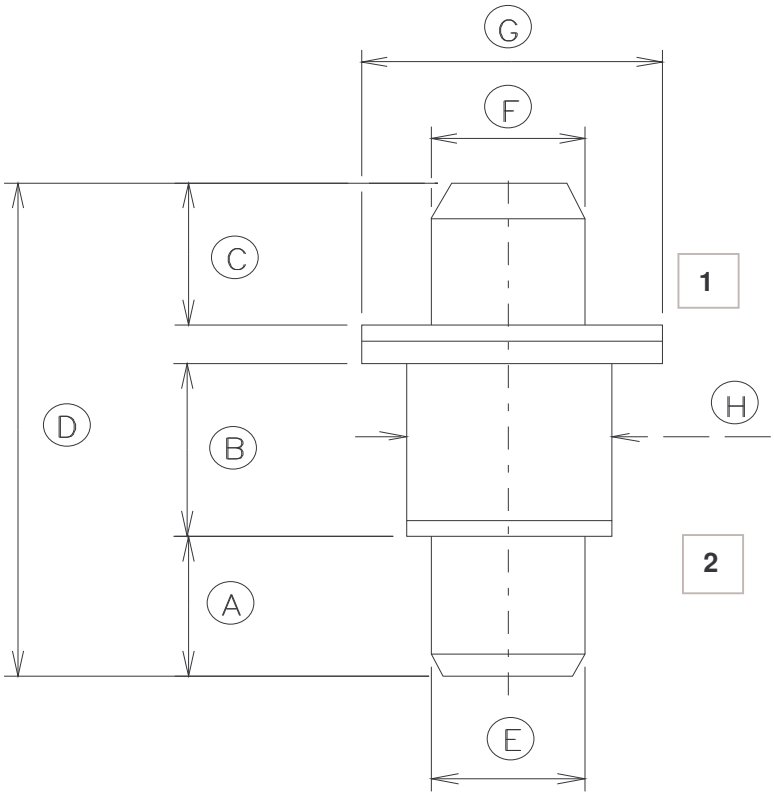

SYMBOL	MILLIMETERS	
	MIN.	MAX.
A	1.52	1.63
B	1.75	1.85
C	1.52	1.63
D	5.20	5.72
E	∅ 1.52	∅ 1.63
F	∅ 1.52	∅ 1.63
G	∅ 3.00	∅ 3.23
H	∅ 1.95	∅ 2.11

FIGURE 2 - PHYSICAL DIMENSIONS (CONTINUED)

FIGURE 2(h) – Variants 43 to 48

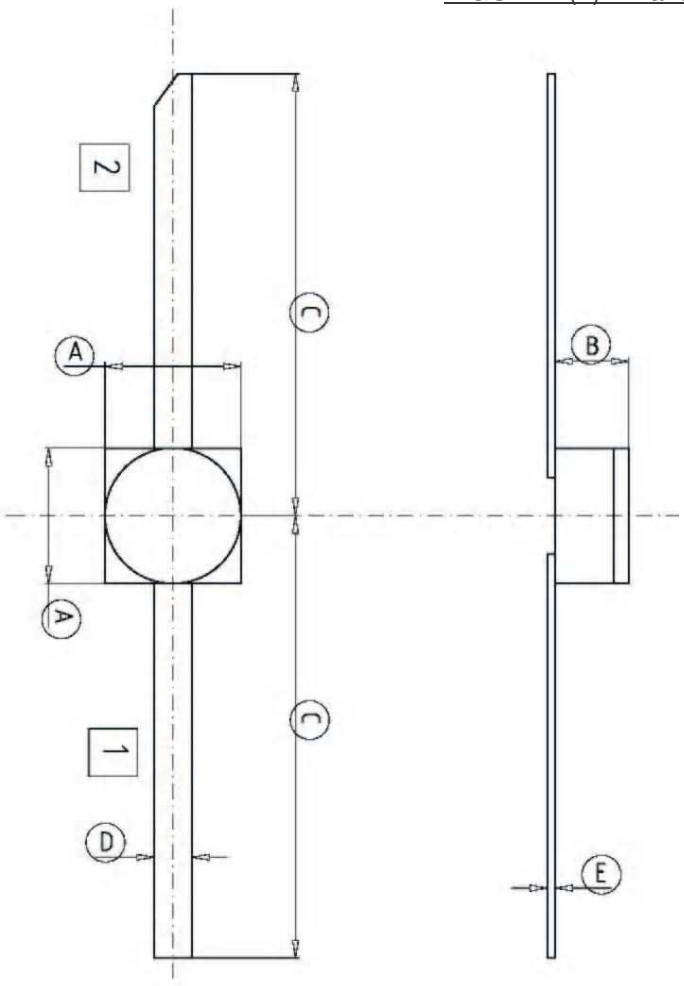

SYMBOL	MILLIMETERS	
	MIN.	MAX.
A	1.68	1.88
B	0.91	1.01
C	6.15	6.55
D	0.45	0.55
E	0.08	0.12

FIGURE 3 - FUNCTIONAL DIAGRAM



1 : Anode
2 : Cathode

NOTES

1. For variants 01 to 06, 08 to 13, 15 to 20, 22 to 27, 29 to 34 and 36 to 41: The cathode end shall be marked with a black dot. The marking will not be on the cathode connection but adjacent to it as shown in Figures 2(a) to 2(f).
2. For variants 07, 14, 21, 28, 35 and 42 terminal identification shall be by means of the physical configuration of the package as shown in Figure 2(g).
3. For variants 43 to 48 the cathode end shall be indicated by a 45° chamfer to the lead end as shown in Figure 2(h).

4. REQUIREMENTS

4.1 General

The complete requirements for procurement of the diodes specified herein shall be as stated in this specification and ESCC Generic Specification No. 5010 for Discrete Microwave Semiconductor Components. Deviations from the Generic Specification applicable to this specification only, are listed in Para. 4.2.

Deviations from the applicable Generic Specification and this Detail Specification, formally agreed with specific Manufacturers on the basis that the alternative requirements are equivalent to the ESCC requirements and do not affect the components' reliability, are listed in the appendices attached to this specification.

4.2 Deviations from generic specification

4.2.1 Deviations from Special In-process Controls

(a) Para. 5.2, Wafer Lot Acceptance : S.E.M. inspection shall be performed on 3 dice, after die separation.
(b) Para. 5.3, Wafer Screening (Chart II(a)) : Minority Carrier Lifetime shall be performed as an on-wafer measurement on a sample of 27 dice per wafer.

4.2.2 Deviations from Final Production Tests (Chart II(b))

(a) Para. 6.3, Pre-burn-in : Shall be performed in accordance with Para. 9.21(a) using the conditions specified in Table 5(a) of this specification for a duration of 48 hours minimum.
(b) Para 9.2.2, Die Shear : Individual forces need not be recorded and the minimum residual die area shall be ≥ 50% of the original die size.

4.2.3 Deviations from Burn-in and Electrical Measurements (Chart III(a))

(a) Para. 9.21, High Temperature Reverse Bias Burn-in : Shall be performed at 75% of rated V_R.

4.2.4 Deviations from Qualification Tests (Chart IV)

(a) Para. 9.2.4, Die-Shear : Individual forces need not be recorded and the minimum residual die area shall be ≥ 50% of the original die size.
(b) Para. 9.14, Vibration Test : Shall not be performed.
(c) Para. 9.15, Constant Acceleration : Shall not be performed.
(d) Para. 9.23, Special Testing : Shall not be performed.

4.2.5 Deviations from Lot Acceptance Tests (Chart V)

(a) Para. 9.14, Vibration : Shall not be performed.
(b) Para. 9.15, Constant Acceleration : Shall not be performed.
(c) Para. 9.23, Special Testing : Shall not be performed.

4.3 Mechanical and environmental requirements

4.3.1 Dimension Check

The dimensions of the diodes specified herein shall be checked. They shall conform to those shown in Figure 2.

4.3.2 Weight

The maximum weight of the diodes specified herein shall be as follows :
- Variants 01 to 06, 08 to 13, 15 to 20, 22 to 27, 29 to 34, 36 to 41 and 43 to 48 : 0.02g.
- Variants 07, 14, 21, 28, 35 and 42 : 0.15g

4.3.3 Terminal Strength

The requirements for terminal strength are specified in Section 9 of ESCC Generic Specification No. 5010. The test conditions shall be as follows :

(a) Condition : 'A' (tension).

Variants 01, 03 to 06, 08, 10 to 13, 15, 17 to 20, 22, 24 to 27, 29, 31 to 34, 36, 38 to 41 and 43 to 48 :

- Force : 1.25 N
- Duration : 10 seconds

4.3.4 Bond Strength

The requirements for bond strength are specified in Section 9 of ESCC Generic Specification No. 5010. The test conditions shall be as follows :

(a) Condition : 'A' (tension).
(b) Separating Force : 0.03N minimum.

4.3.5 Die Shear

The requirements for die shear are specified in Section 9 of ESCC Generic Specification No. 5010. The test conditions shall be as follows :

(a) Semiconductor material remaining : 50% minimum.

4.3.6 High Temperature Stabilisation Bake

The requirements for high temperature stabilisation bake are specified in Section 9 of ESCC Generic Specification No. 5010. The temperature to be applied shall be + 175 (+0 –3)°C.

4.4 Materials and finishes

The materials and finishes shall be as specified herein. Where a definite material is not specified, a material which will enable the diodes specified herein to meet the performance requirements of this specification shall be used. Acceptance or approval of any constituent material shall not guarantee acceptance of the finished product.

4.4.1 Case

The case shall be hermetically sealed and have a ceramic body. The lid shall be welded or preform soldered.

4.4.2 Lead Materials and Finish

(a) For variants 01, 03 to 06, 08, 10 to 13, 15, 17 to 20, 22, 24 to 27, 29, 31 to 34, 36 and 38 to 41, the body and lid material shall be Type 'D' with Type '7' finish and the lead material shall be Type 'E' with Type '2' finish in accordance with the requirements of ESCC Basic Specification No 23500.
(b) For variants 02, 09, 16, 23, 30 and 37, the body and lid material shall be Type 'D' with Type '7' finish in accordance with the requirements of ESCC Basic Specification No 23500.
(c) For variants 07, 14, 21, 28, 35 and 42, the body material shall be Type 'A' with Type '7' finish and the lid material shall be Type 'D' with Type '7' finish in accordance with the requirements of ESCC Basic Specification No 23500.
(d) For variants 43 to 48, the lead material shall be Type 'D' with Type '7' finish in accordance with the requirements of ESCC Basic Specification No 23500.

4.5 Marking

4.5.1 General

The marking of components delivered to this specification shall be in accordance with the requirements of ESCC Basic Specification No. 21700 and the following paragraphs. When the component is too small to accommodate all of the marking specified, as much as space permits shall be marked and the marking information, in full, shall accompany the component in its primary package.

The information to be marked and the order of precedence, shall be as follows :
(a) Cathode Identification.
(b) The ESCC Component Number.
(c) Traceability Information.

4.5.2 Cathode Identification

Cathode Identification shall be as shown in Figures 2 and 3 of this specification.

4.5.3 The SCC Component Number

Each component shall bear the SCC Component Number which shall be constituted and marked as follows:

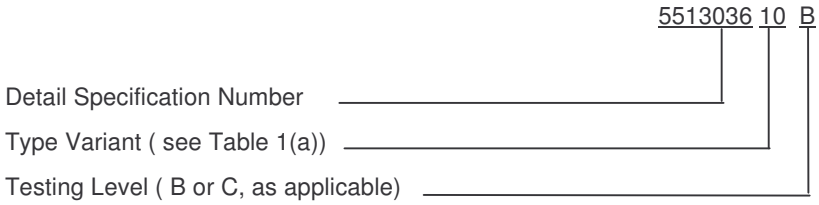

4.5.4 Traceability Information

Each component shall be marked in respect of traceability information as defined in ESCC Basic Specification No. 21700.

4.6 Electrical measurements

4.6.1 Electrical Measurements at Room Temperature

The parameters to be measured at room temperature are scheduled in Table 2. Unless otherwise specified, the measurements shall be performed at T_{amb} = + 22 ± 3°C.

4.6.2 Electrical Measurements at High and Low Temperatures

The parameters to be measured at high and low temperatures are scheduled in Table 3. Unless otherwise specified, the measurements shall be performed at + 150 °C (+0-3)°C.

4.6.3 Circuits for Electrical Measurements

Circuits for use in performed electrical measurements listed in Table 2 of this specification are shown in Figure 4.

4.7 Burn-in tests

Burn-in shall be Category 2 of Chart III (a) of Generic Specification N° 5010.

4.7.1 Parameters Drift Values

The parameter drift values applicable to burn-in are specified in Table 4 of this specification. Unless otherwise stated, the measurements shall be performed at T_{amb} = + 22 ± 3°C. The parameters drift values (Δ) applicable to the scheduled parameters shall not be exceeded. In addition to these drift value requirements for a given parameter, the appropriate limit value specified in Table 2 shall not be exceeded.

4.7.2 Conditions for High Temperature Reverse Bias Burn-in

The requirements for the High Temperature Reverse Bias Burn-in are specified in Section 7 of ESCC Generic Specification No. 5010. The conditions for High Temperature Reverse Bias Burn-in shall be as specified in Table 5(a) of this specification.

4.7.3 Conditions for Power Burn-in

The requirements of Power Burn-in are specified in Section 7 of ESCC Generic Specification No. 5010. The conditions for Power Burn-in shall be as specified in Table 5(b) of this specification.

4.7.4 Electrical Circuits for High Temperature Reverse Bias Burn-in

Circuits for use in performing the High Temperature Reverse Bias Burn-in test are shown in Figures 5(a) and 5(b) of this specification.

TABLE 2(a) - ELECTRICAL MEASUREMENTS AT ROOM TEMPERATURE - DC PARAMETERS

No.	CHARACTERISTICS	SYMBOL	MIL-STD-750 TEST METHOD	TEST CONDITIONS	LIMITS		UNIT
					MIN.	MAX	
1	Reverse Current 1	I_{R1}	4016	V_R = - 50V	-	10	µA
2	Reverse Current 2	I_{R2}	4016	V_R = - 25V	-	100	nA
3	Forward Voltage	V_F	4011	I_F = 100 mA	-	1.1	V
4	Thermal Resistance	$R_{TH(J-C)}$	3101 Variants 01 to 06, 08 to 13, 15 to 20, 22 to 27, 29 to 34, 36 to 41 and 43 to 48. Variants 07, 14, 21, 28, 35 and 42.	Note 1 Power = 0.25 W Power = 0.50 W	-	Note 2	°C/W

NOTES
1. Pulsed measurement, pulse width = 10ms.
2. See Item 4 of Table 1(b).

TABLE 2(b) - ELECTRICAL MEASUREMENTS AT ROOM TEMPERATURE - AC PARAMETERS

No.	CHARACTERISTICS	SYMBOL	TEST FIG.	MIL-STD-750 TEST METHOD	TEST CONDITIONS	LIMITS		UNIT
						MIN.	MAX	
5	Total Capacitance	C_T	-	4001	V_R = -6V f = 1 MHz	-	Note 1	pF
6	Forward Series Resistance	R_{SF}	-	4056	I_F = 10 mA f_0 = 120 MHz	-	Note 2	Ω
7	Minority Carrier Lifetime Note 3	τ_L	4(a)	-	I_F = 10 mA I_R = 6 mA	-	Note 4	ns

NOTES
1. See column 4 of Table 1(a). Junction capacitance = Total capacitance – Case capacitance.
   Typical case capacitance for cases in Figures 2(a) to 2(f) = 0.12 pF.
   Typical case capacitance for cases in Figure 2(g) = 0.18 pF.
   Typical case capacitance for cases in Figure 2(h) = 0.13 pF.
2. See column 5 of Table 1(a).
3. Only during Wafer Screening on a sample of 27 dice per wafer
4. See Column 6 Table 1(a).

TABLE 3 - ELECTRICAL MEASUREMENTS AT HIGH AND LOW TEMPERATURES

No.	CHARACTERISTICS	SYMBOL	MIL-STD-750 TEST METHOD	TEST CONDITIONS	LIMITS		UNIT
					MIN.	MAX	
2	Reverse Current 2	I_{R2}	4016	V_R = -25V	-	1	µA

TABLE 4 - PARAMETER DRIFT VALUES

No.	CHARACTERISTICS	SYMBOL	SPEC. AND/OR TEST METHOD	TEST CONDITIONS	CHANGE LIMITS (Δ)	UNIT
2	Reverse Current 2	I_{R2}	As per Table 2	As per Table 2	± 10 (1) or (2) ± 100 (1)	nA %
3	Forward Voltage	V_F			± 5 (1)	%
5	Total Capacitance	C_T			± 5 (1) (3)	%

NOTES

1. Δ1 = Δ2 = Δ3.
2. Whichever is the greater, referred to the initial measurement.
3. Rounded upwards to the nearest 0.01 pF value. If C_T < 0.25 pF then Δ = ± 10%.

FIGURE 4 - CIRCUITS FOR ELECTRICAL MEASUREMENTS

FIGURE 4(a) - CIRCUIT FOR MESUREMENT OF MINORITY CARRIER LIFETIME

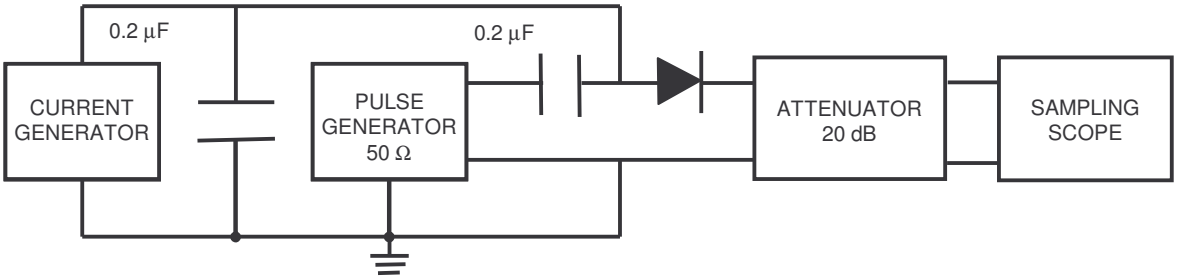

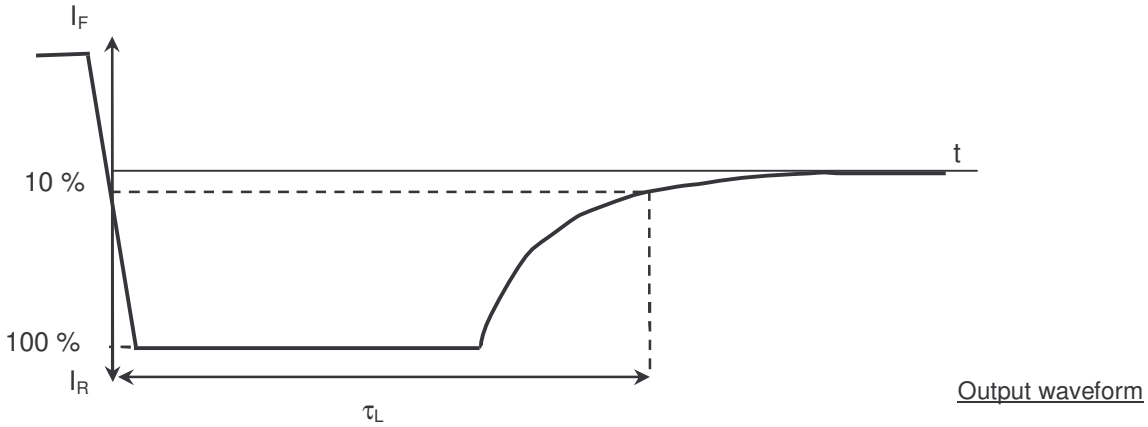

Output waveform

TABLE 5(a) - CONDITIONS FOR HIGH TEMPERATURE REVERSE BIAS BURN-IN

No	CHARACTERISTICS	SYMBOL	CONDITIONS	UNIT
1	Ambient Temperature	T_{amb}	+ 150 (-0 +3)	℃
2	Reverse Voltage	V_R	-37.5	V
3	Duration	t	Note 1	Hours

NOTES

1. See ESCC Generic Specification No. 5010.

TABLE 5(b) - CONDITIONS FOR POWER BURN-IN AND OPERATING LIFE TESTS

No	CHARACTERISTICS	SYMBOL	CONDITIONS	UNIT
1	Ambient Temperature	T_{amb}	+ 125 (-0 +3)	℃
2	Forward Current	I_F	Variants 43 to 48 : 30 Variants 01 to 06, 08 to 13 and 15 to 20 : 50 Variants 22 to 27, 29 to 34 and 36 to 41 : 50 Variants 07 and 14 : 60 Variants 21, 28, 35 and 42 : 80	mA
3	Duration of Power Burn-In	t	Note 1	Hours
4	Duration of Operating Life Tests	t	Note 1	Hours

NOTES

1. See ESCC Generic Specification No. 5010.

FIGURE 5(a) - ELECTRICAL CIRCUIT FOR HIGH TEMPERATURE REVERSE BIAS BURN-IN

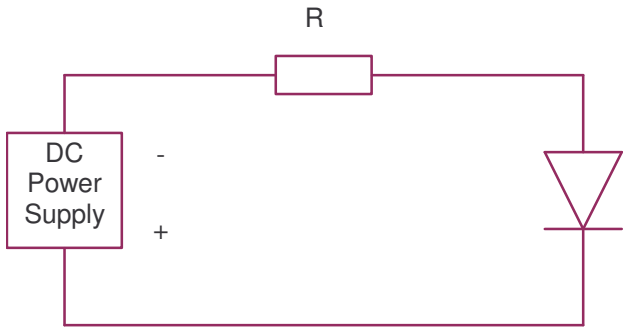

NOTES

1 : At the end of the HTRB, T_{amb} shall be decreased to room temperature and the reverse bias shall remain applied until T_{amb} < +35℃.

FIGURE 5(b) - ELECTRICAL CIRCUIT FOR POWER BURN-IN AND OPERATING LIFE TESTS

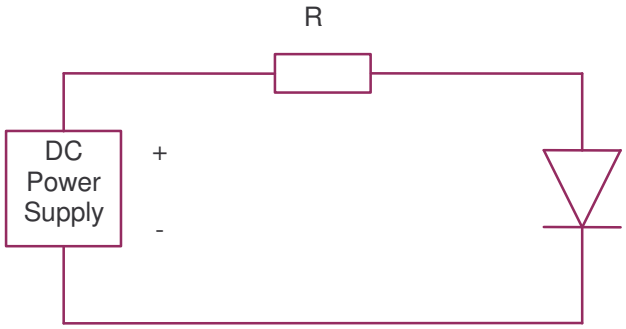

4.8 Environmental and endurance tests (Charts IV And V of ESCC Generic Specification No. 5010)

4.8.1 Electrical Measurements on Completion of Environmental Tests

The parameters to be measured on completion of environmental tests are scheduled in Table 2. Unless otherwise stated, the measurements shall be performed at T_{amb} = +22 ± 3°C.

4.8.2 Electrical Measurements at Intermediate Points and on Completion of Endurance Tests

The parameters to be measured at intermediate points and on completion of endurance tests are scheduled in Table 6. Unless otherwise stated, the measurements shall be performed at T_{amb} = +22 ± 3°C.

4.8.3 Conditions for Operating Life Tests (Part of Endurance Testing)

The requirements for operating life testing are specified in Section 9 of ESCC Generic Specification No. 5010. The conditions for operating life testing are specified in Table 5(c) of this specification.

4.8.4 Electrical Circuits for Operating Life Tests

The circuit to be used for performance of the operating life test shall be the same as shown in Figure 5(b) for Power Burn-in.

4.9 Total Dose Irradiation Testing

Not applicable.

4.10 Special testing

Not applicable.

TABLE 6 - ELECTRICAL MEASUREMENTS AT INTERMEDIATE POINTS AND ON COMPLETION OF ENDURANCE TESTING

No.	CHARACTERISTICS	SYMBOL	SPEC. AND/OR TEST METHOD	TEST CONDITIONS	LIMITS		UNIT
					MIN.	MAX.	
1	Reverse Current 1	I_{R1}	As per Table 2	As per Table 2	As per Table 2		µA
2	Reverse current 2	I_{R2}	As per Table 2	As per Table 2	As per Table 2		nA
3	Forward Voltage	V_F	As per Table 2	As per Table 2	As per Table 2		V
5	Total Capacitance	C_T	As per Table 2	As per Table 2	As per Table 2		pF

FIGURE 6 – BIAS CONDITIONS FOR IRRADATION TESTING

Not applicable

TABLE 7 – ELECTRICAL MEASUREMENTS DURING AND ON COMPLETION OF IRRADATION TESTING

Not applicable

APPENDIX 'A'

AGREED DEVIATIONS FOR CHELTON TELECOM & MICROWAVE (F)

ITEMS AFFECTED	DESCRIPTION OF DEVIATIONS
Para. 4.2.2	Para. 9.12, Radiographic Inspection of Chart III(a) : May be performed after Para. 9.7, Particle Impact Noise Detection (PIND) test, in X and Z axes only.
Para. 4.2.3	Para. 9.12, Radiographic Inspection : May be performed after Para. 9.7, PIND test of Chart II(b).

Pages 1 to 22

ORIGINAL

MICROWAVE, SILICON, PIN,

FAST SWITCHING, DIODES,

BASED ON TYPES DH50251 to DH50256

ESCC Detail Specification No. 5513/034

MAY 2007

Issue / Rev.	Approved by		
	NAME	Date	VISA
3	R&D : S. PEREIRA	07/06/07	
	Production Management : S. CASSOU	08/06/07	
	Marketing : L. ETIENNE	11/06/07	
	Q.A : J-P. TETART	13-06-2007	

DOCUMENTATION CHANGE NOTICE

Rev. Letter	Rev. Date	CHANGE Reference / Item	Approved DCR No.
Issue 1 A	July 1997	Initial version	
Issue 2	January 2005	All Pages	
Issue 3	May 2007	(As agreed with ESA) All Pages	

TABLE OF CONTENTS

1. GENERAL 5

1.1 SCOPE 5
1.2 COMPONENT TYPE VARIANTS 5
1.3 MAXIMUM RATINGS 5
1.4 PARAMETERS DERATING INFORMATION 5
1.5 PHYSICAL DIMENSIONS 5
1.6 FUNCTIONAL DIAGRAM 5
1.7 HANDLING PRECAUTIONS 5

2. APPLICABLE DOCUMENTS 5

3. TERMS, DEFINITIONS, ABBREVIATIONS, SYMBOLS AND UNITS 5

4. REQUIREMENTS 14

4.1 GENERAL 14
4.2 DEVIATIONS FROM GENERIC SPECIFICATION 14
4.2.1 Deviations from Special In-process Controls 14
4.2.2 Deviations from Final Production Tests (Chart II) 14
4.2.3 Deviations from Burn-in and Electrical Measurements (Chart III) 14
4.2.4 Deviations from Qualification Tests (Chart IV) 14
4.2.5 Deviations from Lot Acceptance Tests (Chart V) 14
4.3 MECHANICAL AND ENVIRONMENTAL REQUIREMENTS 14
4.3.1 Dimension Check 14
4.3.2 Weight 14
4.3.3 Terminal Strength 15
4.3.1 Bond Strength 15
4.3.2 Die Shear 15
4.3.1 High Temperature Stabilisation Bake 15
4.4 MATERIAL AND FINISHES 15
4.4.1 Case 15
4.4.2 Lead Material and Finish 15
4.5 MARKING 15
4.5.1 General 15
4.5.2 Cathode Identification 16
4.5.3 The ESCC Component Number 16
4.5.4 Traceability Information 16
4.6 ELECTRICAL MEASUREMENTS 16
4.6.1 Electrical Measurements at Room Temperature 16
4.6.2 Electrical Measurements at High and Low Temperatures 16
4.6.3 Circuits for Elestrical Measurements 16
4.7 BURN-IN TESTS 16
4.7.1 Parameter Drift Values 16
4.7.2 Conditions for High Temperature Reverse Bias Burn-in 16
4.7.3 Conditions for Power Burn-in 16
4.7.4 Electrical Circuits for High Temperature Reverse Bias and Power Burn-in 16
4.8 ENVIRONMENTAL AND ENDURANCE TESTS (CHARTS IV AND V OF ESCC GENERIC SPECIFICATION NO. 5010) 20
4.8.1 Electrical Measurements on Completion of Environmental Tests 20
4.8.2 Electrical Measurements at Intermediate Points and on Completion of Endurance Tests 20
4.8.3 Conditions for Operating Life Tests (Part of Endurance Testing) 20
4.8.4 Electrical Circuits for Operating Life Tests 20
4.9 TOTAL DOSE IRRADIATION TESTING 20
4.10 SPECIAL TESTING 20

TABLES

1(a)	Type Variants	6
1(b)	Maximum Ratings	7
2(a)	Electrical Measurements at Room Temperature – D.C. Parameters	17
2(b)	Electrical Measurements at Room Temperature – A.C. Parameters	17
3	Electrical Measurements at High and Low Temperatures	17
4	Parameter drift Values	18
5(a)	Conditions for High Temperature Reverse Bias Burn-In	19
5(b)	Conditions for Power Burn-In and Operating Life Tests	19
6	Electrical Measurements at Intermediate Points and on Completion of Endurance Testing	21
7	Electrical Measurements During and on Completion of Irradiation Testing	21

FIGURES

1	Parameter Derating Information	8
2	Physical Dimensions	9
3	Functional Diagram	13
4	Circuits for Electrical Measurements	18
5(a)	Electrical circuit for High Temperature Reverse Bias Burn-in	19
5(b)	Electrical Circuit for Power Burn-in and Operating Life Tests	20
6	Bias Conditions for Irradiation Testing	21

APPENDICES (APPLICABLE TO SPECIFIC MANUFACTURERS ONLY)

'A'	Agreed Deviations for Chelton Telecom & Microwave (F)	22

1. GENERAL

1.1 Scope

This specification details the ratings, physical and electrical characteristics, test and inspection data for a Microwave Silicon PIN Fast Switching Diode, based on Types DH50251 to DH50256. It shall be read in conjunction with ESCC Generic Specification No. 5010, the requirements of which are supplemented herein.

1.2 Component type variants

Variants of the basic diodes specified herein, which are also covered by this specification are given in Table 1(a).

1.3 Maximum ratings

The maximum ratings, which shall not be exceeded at any time during use or storage, applicable to the diodes specified herein, are as scheduled in Table 1(b).

1.4 Parameters derating information

The derating information applicable to the diodes specified herein is shown in Figure 1.

1.5 Physical dimensions

The physical dimensions of the diodes specified herein are shown in Figure 2.

1.6 Functional diagram

The functional diagram, showing lead identification, of the diodes specified herein, is shown in Figure 3.

1.7 Handling precautions

These devices are susceptible to be damaged by electrostatic discharge. Therefore, suitable precautions shall be employed for protection during all phases of manufacture, testing, packaging, shipment and any handling.

The components are categorised as Class 2 with a Minimum Critical Path Failure Voltage (MCPFV) of 1400V.

2. APPLICABLE DOCUMENTS

The following documents form part of this specification and shall be read in conjunction with it :

(a) ESCC Generic Specification No. 5010 for Discrete Microwave Semiconductor Components.
(b) MIL-STD-750, Test Methods for Semiconductor Devices.

3. TERMS, DEFINITIONS, ABBREVIATIONS, SYMBOLS AND UNITS

For the purpose of this specification, the terms, definitions, abbreviations, symbols and units specified in ESCC Basic Specification No. 21300 shall apply. In addition the following symbols are used :

C_T = Total Capacitance.

TABLE 1(a) – TYPE VARIANTS

(1) VARIANT	(2) BASED ON TYPE	(3) FIGURE	(4) TOTAL CAPACITANCE C_T (pF) (Note 1) MAX	(5) FORWARD SERIES RESISTANCE R_{SF} (Ω) MAX	(6) MINORITY CARRIER LIFETIME τ_L (ns) MIN	(7) BODY-LID AND/OR LEAD MATERIAL AND FINISH
01	DH50251	2 (a)	0.19	2.4	265	D7 - E2
02		2 (b)				D7
03		2 (c)				D7 - E2
04		2 (d)				
05		2 (e)				
06		2 (f)				
07		2 (g)	0.26			A7 - D7
37		2 (h)	0.20			D7
08	DH50252	2 (a)	0.21	2.2	400	D7 - E2
09		2 (b)				D7
10		2 (c)				D7 - E2
11		2 (d)				
12		2 (e)				
13		2 (f)				
14		2 (g)	0.28			A7 - D7
38		2 (h)	0.22			D7
15	DH50253	2 (a)	0.25	2.0	600	D7 - E2
16		2 (b)				D7
17		2 (c)				D7 - E2
18		2 (d)				
19		2 (e)				
20		2 (f)				
21		2 (g)	0.32			A7 - D7
39		2 (h)	0.26			D7
22	DH50254	2 (a)	0.30	1.4	720	D7 - E2
23		2 (b)				D7
24		2 (c)				D7 - E2
25		2 (d)				
26		2 (e)				
27		2 (f)				
28		2 (g)	0.37			A7 - D7
40		2 (h)	0.31			D7
29	DH50255	2 (a)	0.36	0.9	800	D7 - E2
30		2 (b)				D7
31		2 (c)				D7 - E2
32		2 (d)				
33		2 (e)				
34		2 (f)				
35		2 (g)	0.43			A7 - D7
41		2 (h)	0.37			**D7**
36	DH50256	2 (g)	0.60	0.8	970	**A7 - D7**

NOTES

1. V_R = - 50.0V, f = 1.0MHz

TABLE 1(b) - MAXIMUM RATINGS

No.	CHARACTERISTIC	SYMBOL	MAXIMUM RATINGS	UNIT	REMARKS
1	D.C. Reverse Voltage	V_R	-250	V	I_R = 10 µA
2	D.C. Forward Current (Continuous) Variants 37 to 41 Variants 01 to 06 and 08 to 13 Variants 15 to 20, 22 to 27 and 29 to 34 Variant 07 and 14 Variant 21, 28, 35 and 36	I_F	 **60** **150** **180** **240** **300**	mA	Note 1
3	R.F. Power Dissipation Variants 37 to 41 Variants 01 to 06 and 08 to 13 Variants 15 to 20, 22 to 27 and 29 to 34 Variant 07 and 14 Variant 21, 28, 35 and 36	P_{tOt}	 0.26 0.50 0.62 0.83 1.25	W	Note 1
4	Thermal Resistance (Junction to Case) Variants 37 to 41 Variants 01 to 06 and 08 to 13 Variants 15 to 20, 22 to 27 and 29 to 34 Variant 07 and 14 Variant 21, 28, 35 and 36	$R_{TH(J-C)}$	 280 150 120 90 60	°C/W	-
5	Operating Temperature Range	T_{op}	-55 to +150	°C	T_{case}
6	Storage Temperature Range	T_{stg}	-65 to +175	°C	-
7	Soldering Temperature	T_{sol}	+ 230	°C	Note 2

NOTES

1. At T_{case} = + 75°C. For derating at T_{case} > + 75°C, see Figure 1.
2. Duration 5 seconds maximum and the same termination shall not be resoldered until 3 minutes have elapsed.

FIGURE 1 - PARAMETER DERATING INFORMATION

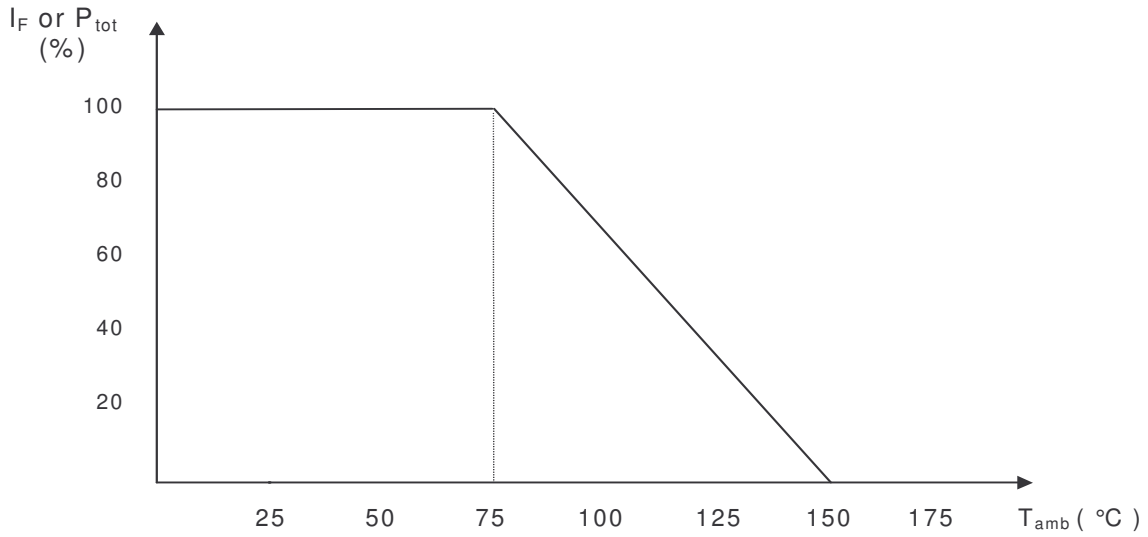

Forward Current or Power Dissipation versus Temperature

FIGURE 2 - PHYSICAL DIMENSIONS

FIGURE 2(a) – Variants 01, 08, 15, 22, 29

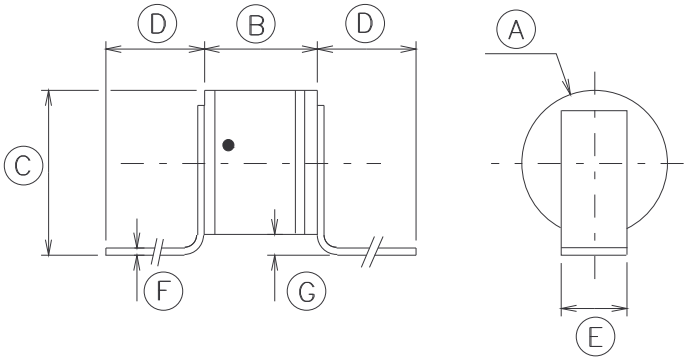

SYMBOL	MILLIMETERS	
	MIN.	MAX.
A	∅ 1.07	∅ 1.47
B	0.95	1.35
C	1.30	1.90
D	2.50	-
E	0.55	0.65
F	0.06	0.10
G	0.10	0.50

FIGURE 2(b) – Variants 02, 09, 16, 23, 30

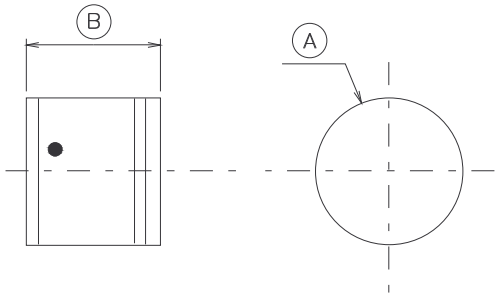

SYMBOL	MILLIMETERS	
	MIN.	MAX.
A	∅ 1.07	∅ 1.47
B	0.95	1.35

FIGURE 2 - PHYSICAL DIMENSIONS (CONTINUED)

FIGURE 2(c) – Variants 03, 10, 17, 24, 31

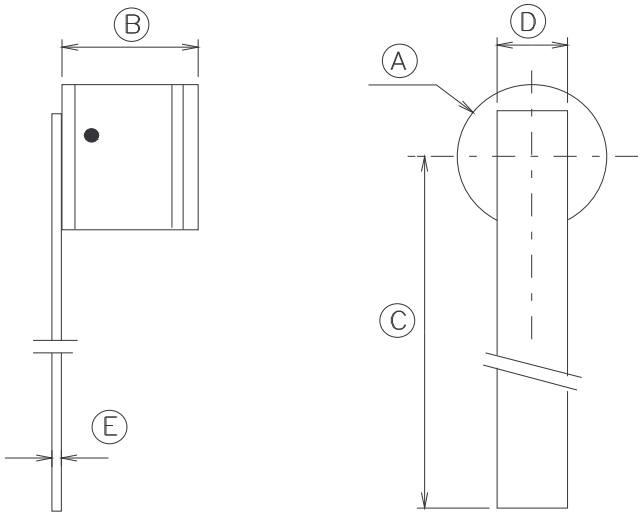

SYMBOL	MILLIMETERS	
	MIN.	MAX.
A	∅ 1.07	∅ 1.47
B	0.95	1.35
C	5.00	-
D	0.55	0.65
E	0.06	0.10

FIGURE 2(d) – Variants 04, 11, 18, 25, 32

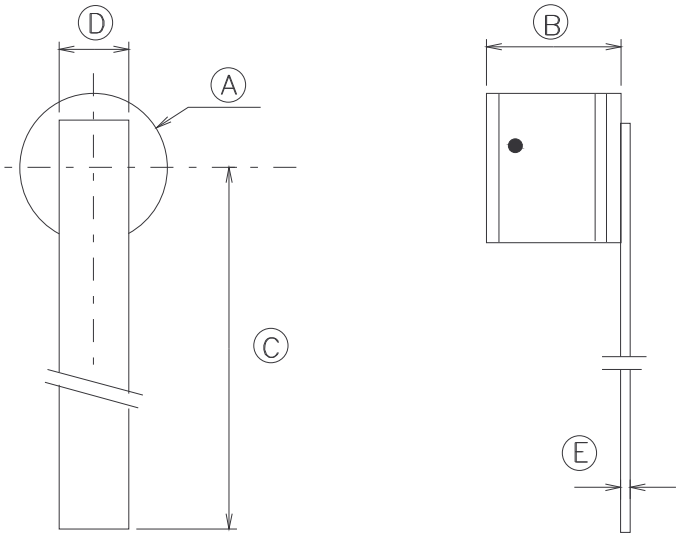

SYMBOL	MILLIMETERS	
	MIN.	MAX.
A	∅ 1.07	∅ 1.47
B	0.95	1.35
C	5.00	-
D	0.55	0.65
E	0.06	0.10

FIGURE 2 - PHYSICAL DIMENSIONS (CONTINUED)

FIGURE 2(e) – Variants 05, 12, 19, 26, 33

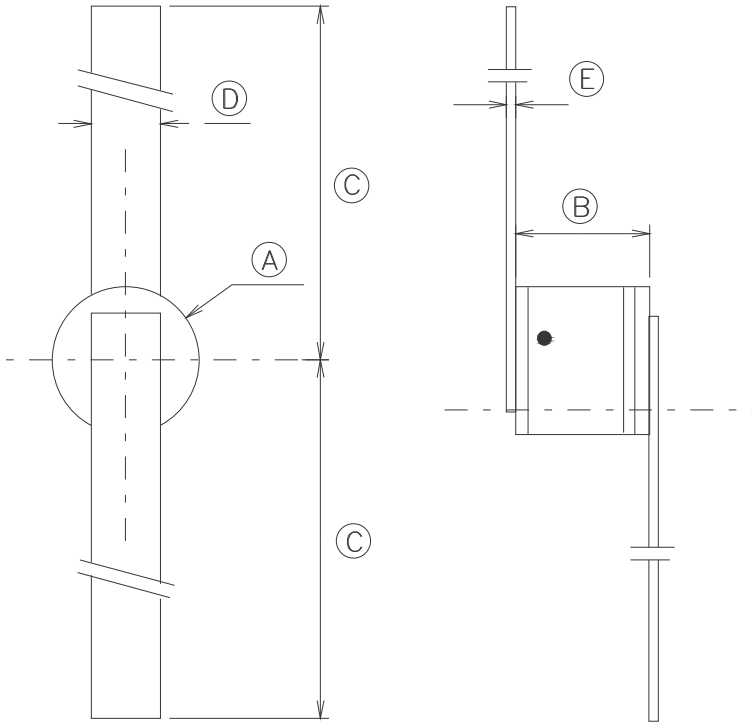

SYMBOL	MILLIMETERS	
	MIN.	MAX.
A	∅1.07	∅1.47
B	0.95	1.35
C	5.00	-
D	0.55	0.65
E	0.06	0.10

FIGURE 2(f) – Variants 06, 13, 20, 27, 34

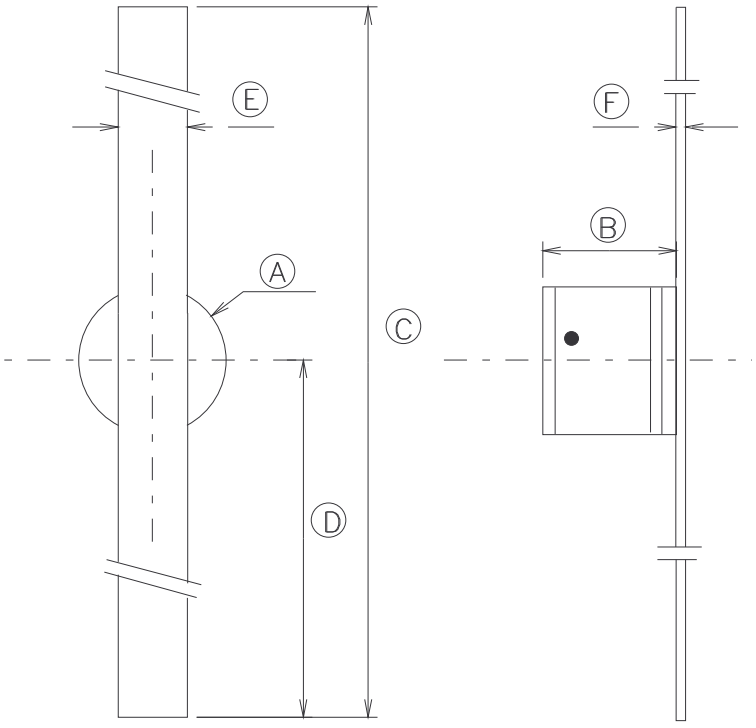

SYMBOL	MILLIMETERS	
	MIN.	MAX.
A	∅ 1.07	∅ 1.47
B	0.95	1.35
C	10.00	10.40
D	5.00	-
E	0.55	0.65
F	0.06	0.10

FIGURE 2 - PHYSICAL DIMENSIONS (CONTINUED)

FIGURE 2(g) – Variants 07, 14, 21, 28, 35, 36

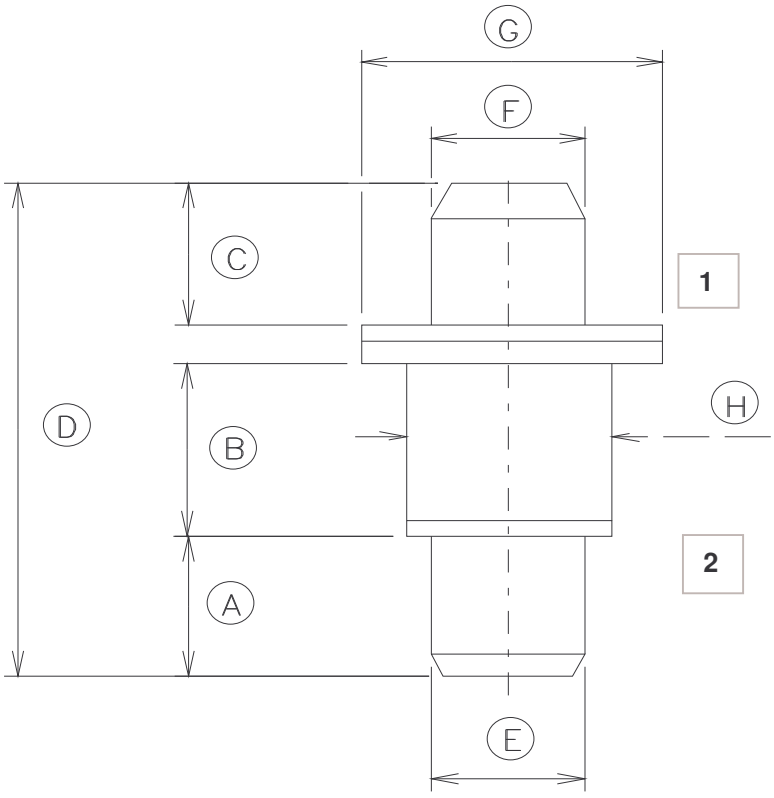

SYMBOL	MILLIMETERS	
	MIN.	MAX.
A	1.52	1.63
B	1.75	1.85
C	1.52	1.63
D	5.20	5.72
E	∅ 1.52	∅ 1.63
F	∅ 1.52	∅ 1.63
G	∅ 3.00	∅ 3.23
H	∅ 1.95	∅ 2.11

FIGURE 2 - PHYSICAL DIMENSIONS (CONTINUED)

FIGURE 2(h) – Variants 37 to 41

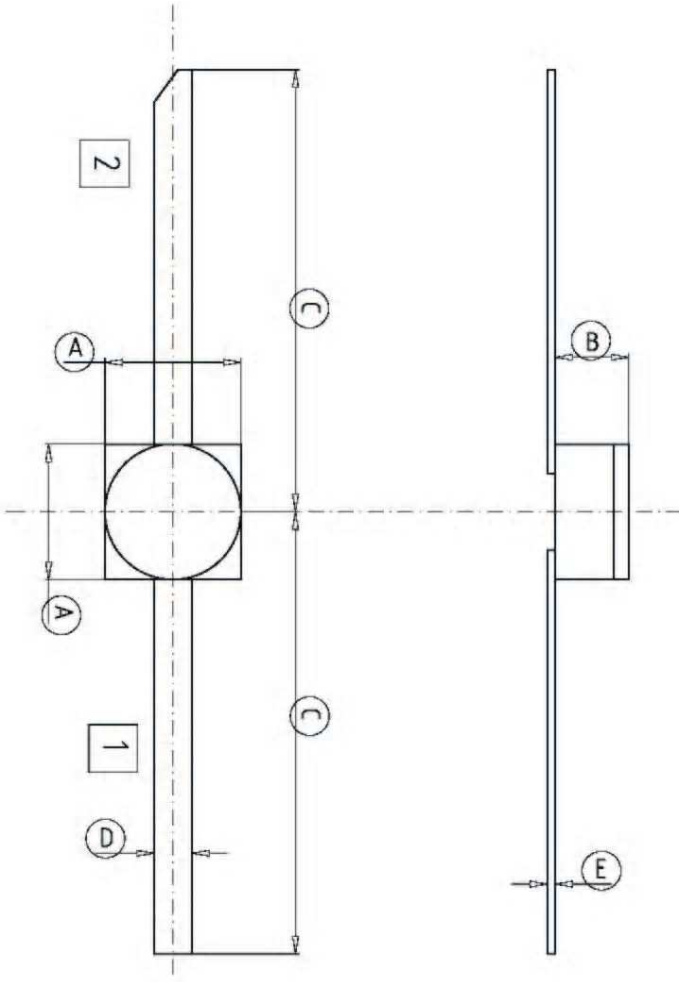

SYMBOL	MILLIMETERS	
	MIN.	MAX.
A	1.68	1.88
B	0.91	1.01
C	6.15	6.55
D	0.45	0.55
E	0.08	0.12

FIGURE 3 - FUNCTIONAL DIAGRAM



1 : Anode
2 : Cathode

NOTES

1. For variants 01 to 06, 08 to 13, 15 to 20, 22 to 27 and 29 to 34: The cathode end shall be marked with a black dot. The marking will not be on the cathode connection but adjacent to it as shown in Figures 2(a) to 2(f).
2. For variants 07, 14, 21, 28, 35 and 36 terminal identification shall be by means of the physical configuration of the package as shown in Figure 2(g).
3. For variants 37 to 41 the cathode end shall be indicated by a 45° chamfer to the lead end as shown in Figure 2(h).

4. REQUIREMENTS

4.1 General

The complete requirements for procurement of the diodes specified herein shall be as stated in this specification and ESCC Generic Specification No. 5010 for Discrete Microwave Semiconductor Components. Deviations from the Generic Specification applicable to this specification only, are listed in Para. 4.2.

Deviations from the applicable Generic Specification and this Detail Specification, formally agreed with specific Manufacturers on the basis that the alternative requirements are equivalent to the ESCC requirements and do not affect the components' reliability, are listed in the appendices attached to this specification.

4.2 Deviations from generic specification

4.2.1 Deviations from Special In-process Controls

(a) Para. 5.2, Wafer Lot Acceptance : S.E.M. inspection shall be performed on 3 dice, after die separation.
(b) Para. 5.3, Wafer Screening (Chart II(a)) : Minority Carrier Lifetime shall be performed as an on-wafer measurement on a sample of 27 dice per wafer.

4.2.2 Deviations from Final Production Tests (Chart II(b))

(a) Para. 6.3, Pre-burn-in : Shall be performed in accordance with Para. 9.21(a) using the conditions specified in Table 5(a) of this specification for a duration of 48 hours minimum.
(b) Para 9.2.2, Die Shear : Individual forces need not be recorded and the minimum residual die area shall be ≥ 50% of the original die size.

4.2.3 Deviations from Burn-in and Electrical Measurements (Chart III(a))

(a) Para. 9.21, High Temperature Reverse Bias Burn-in : Shall be performed at 75% of rated V_R.

4.2.4 Deviations from Qualification Tests (Chart IV)

(a) Para. 9.2.4, Die-Shear : Individual forces need not be recorded and the minimum residual die area shall be ≥ 50% of the original die size.
(b) Para. 9.14, Vibration Test : Shall not be performed.
(c) Para. 9.15, Constant Acceleration : Shall not be performed.
(d) Para. 9.23, Special Testing : Shall not be performed.

4.2.5 Deviations from Lot Acceptance Tests (Chart V)

(a) Para. 9.14, Vibration : Shall not be performed.
(b) Para. 9.15, Constant Acceleration : Shall not be performed.
(c) Para. 9.23, Special Testing : Shall not be performed.

4.3 Mechanical and environmental requirements

4.3.1 Dimension Check

The dimensions of the diodes specified herein shall be checked. They shall conform to those shown in Figure 2.

4.3.2 Weight

The maximum weight of the diodes specified herein shall be as follows :
- Variants 01 to 06, 08 to 13, 15 to 20, 22 to 27, 29 to 34 and 37 to 41 : 0.02g.
- Variants 07, 14, 21, 28, 35 and 36 : 0.15g

4.3.3 Terminal Strength

The requirements for terminal strength are specified in Section 9 of ESCC Generic Specification No. 5010. The test conditions shall be as follows :

(a) Condition : 'A' (tension).

Variants 01, 03 to 06, 08, 10 to 13, 15, 17 to 20, 22, 24 to 27, 29, 31 to 34 and 37 to 41:

- Force : 1.25 N
- Duration : 10 seconds

4.3.4 Bond Strength

The requirements for bond strength are specified in Section 9 of ESCC Generic Specification No. 5010. The test conditions shall be as follows :

(a) Condition : 'A' (tension).
(b) Separating Force : 0.03N minimum.

4.3.5 Die Shear

The requirements for die shear are specified in Section 9 of ESCC Generic Specification No. 5010. The test conditions shall be as follows :

(a) Semiconductor material remaining : 50% minimum.

4.3.6 High Temperature Stabilisation Bake

The requirements for high temperature stabilisation bake are specified in Section 9 of ESCC Generic Specification No. 5010. The temperature to be applied shall be + 175 (+0 –3)°C.

4.4 Materials and finishes

The materials and finishes shall be as specified herein. Where a definite material is not specified, a material which will enable the diodes specified herein to meet the performance requirements of this specification shall be used. Acceptance or approval of any constituent material shall not guarantee acceptance of the finished product.

4.4.1 Case

The case shall be hermetically sealed and have a ceramic body. The lid shall be welded or preform soldered.

4.4.2 Lead Materials and Finish

(a) For variants 01, 03 to 06, 08, 10 to 13, 15, 17 to 20, 22, 24 to 27, 29 and 31 to 34, the body and lid material shall be Type 'D' with Type '7' finish and the lead material shall be Type 'E' with Type '2' finish in accordance with the requirements of ESCC Basic Specification No 23500.
(b) For variants 02, 09, 16, 23 and 30, the body and lid material shall be Type 'D' with Type '7' finish in accordance with the requirements of ESCC Basic Specification No 23500.
(c) For variants 07, 14, 21, 28, 35 and 36, the body material shall be Type 'A' with Type '7' finish and the lid material shall be Type 'D' with Type '7' finish in accordance with the requirements of ESCC Basic Specification No 23500.
(d) For variants 37 to 41, the lead material shall be Type 'D' with Type '7' finish in accordance with the requirements of ESCC Basic Specification No 23500.

4.5 Marking

4.5.1 General

The marking of components delivered to this specification shall be in accordance with the requirements of ESCC Basic Specification No. 21700 and the following paragraphs. When the component is too small to accommodate all of the marking specified, as much as space permits shall be marked and the marking information, in full, shall accompany the component in its primary package.

The information to be marked and the order of precedence, shall be as follows :
(a) Cathode Identification.
(b) The ESCC Component Number.
(c) Traceability Information.

4.5.2 Cathode Identification

Cathode Identification shall be as shown in Figures 2 and 3 of this specification.

4.5.3 The ESCC Component Number

Each component shall bear the ESCC Component Number which shall be constituted and marked as follows:

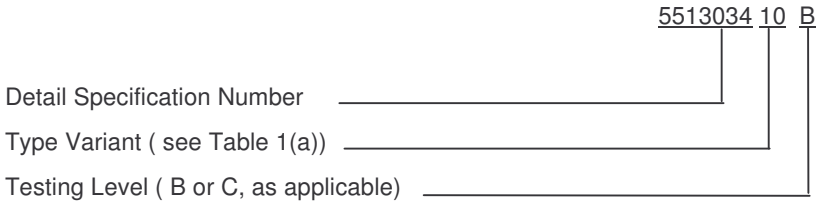

4.5.4 Traceability Information

Each component shall be marked in respect of traceability information as defined in ESCC Basic Specification No. 21700.

4.6 Electrical measurements

4.6.1 Electrical Measurements at Room Temperature

The parameters to be measured at room temperature are scheduled in Table 2. Unless otherwise specified, the measurements shall be performed at T_{amb} = + 22 ± 3°C.

4.6.2 Electrical Measurements at High and Low Temperatures

The parameters to be measured at high and low temperatures are scheduled in Table 3. Unless otherwise specified, the measurements shall be performed at + 150 °C (+0-3)°C.

4.6.3 Circuits for Electrical Measurements

Circuits for use in performed electrical measurements listed in Table 2 of this specification are shown in Figure 4.

4.7 Burn-in tests

Burn-in shall be Category 2 of Chart III (a) of Generic Specification N° 5010.

4.7.1 Parameters Drift Values

The parameter drift values applicable to burn-in are specified in Table 4 of this specification. Unless otherwise stated, the measurements shall be performed at T_{amb} = + 22 ± 3°C. The parameters drift values (Δ) applicable to the scheduled parameters shall not be exceeded. In addition to these drift value requirements for a given parameter, the appropriate limit value specified in Table 2 shall not be exceeded.

4.7.2 Conditions for High Temperature Reverse Bias Burn-in

The requirements for the High Temperature Reverse Bias Burn-in are specified in Section 7 of ESCC Generic Specification No. 5010. The conditions for High Temperature Reverse Bias Burn-in shall be as specified in Table 5(a) of this specification.

4.7.3 Conditions for Power Burn-in

The requirements of Power Burn-in are specified in Section 7 of ESCC Generic Specification No. 5010. The conditions for Power Burn-in shall be as specified in Table 5(b) of this specification.

4.7.4 Electrical Circuits for High Temperature Reverse Bias and Power Burn-in

Circuits for use in performing the High Temperature Reverse Bias Burn-in test are shown in Figures 5(a) and 5(b) of this specification.

TABLE 2(a) - ELECTRICAL MEASUREMENTS AT ROOM TEMPERATURE - DC PARAMETERS

No.	CHARACTERISTICS	SYMBOL	MIL-STD-750 TEST METHOD	TEST CONDITIONS	LIMITS		UNIT
					MIN.	MAX	
1	Reverse Current 1	I_{R1}	4016	V_R = - 250V	-	10	µA
2	Reverse Current 2	I_{R2}	4016	V_R = - 125V	-	500	nA
3	Forward Voltage	V_F	4011	I_F = 100 mA	-	1.1	V
4	Thermal Resistance	$R_{TH(J-C)}$	3101 Variants 01 to 06, 08 to 13 and 37 to 41. Variants 07, 14 to 20, 22 to 27 and 29 to 34. Variant 21, 28, 35 and 36	Note 1 Power = 0.25 W Power = 0.50 W Power = 1.00 W	-	Note 2	°C/W

NOTES
1. Pulsed measurement, pulse width = 4.0µs, p.r.f. = 1.0kHz.
2. See Item 4 of Table 1(b).

TABLE 2(b) - ELECTRICAL MEASUREMENTS AT ROOM TEMPERATURE - AC PARAMETERS

No.	CHARACTERISTICS	SYMBOL	TEST FIG.	MIL-STD-750 TEST METHOD	TEST CONDITIONS	LIMITS		UNIT
						MIN.	MAX	
5	Total Capacitance	C_T	-	4001	V_R = -50V f = 1 MHz	-	Note 1	pF
6	Forward Series Resistance	R_{SF}	-	4056	I_F = 10 mA f_0 = 120 MHz	-	Note 2	Ω
7	Minority Carrier Lifetime Note 3	τ_L	4(a)	-	I_F = 10 mA I_R = 6 mA	Note 4	-	ns

NOTES
1. See column 4 of Table 1(a). Junction capacitance = Total capacitance – Case capacitance.
   Typical case capacitance for cases in Figures 2(a) to 2(f) = 0.12 pF.
   Typical case capacitance for cases in Figure 2(g) = 0.18 pF.
   Typical case capacitance for cases in Figure 2(h) = 0.13 pF.
2. See column 5 of Table 1(a).
3. Only during Wafer Screening on a sample of 27 dice per wafer.
4. See Column 6 Table 1(a).

TABLE 3 - ELECTRICAL MEASUREMENTS AT HIGH AND LOW TEMPERATURES

No.	CHARACTERISTICS	SYMBOL	MIL-STD-750 TEST METHOD	TEST CONDITIONS	LIMITS		UNIT
					MIN.	MAX	
2	Reverse Current 2	I_{R2}	4016	V_R =-125V	-	50	µA

TABLE 4 - PARAMETER DRIFT VALUES

No.	CHARACTERISTICS	SYMBOL	SPEC. AND/OR TEST METHOD	TEST CONDITIONS	CHANGE LIMITS (Δ)	UNIT
2	Reverse Current 2	I_{R2}	As per Table 2	As per Table 2	± 50 (1) or (2) ± 100 (1)	nA %
3	Forward Voltage	V_F			± 5 (1)	%
5	Total Capacitance	C_T			± 5 (1) (3)	%

NOTES

1. Δ1 = Δ2 = Δ3.
2. Whichever is the greater, referred to the initial measurement.
3. Rounded upwards to the nearest 0.01 pF value. If C_T < 0.25 pF then Δ = ± 10%.

FIGURE 4 - CIRCUITS FOR ELECTRICAL MEASUREMENTS

FIGURE 4(a) - CIRCUIT FOR MESUREMENT OF MINORITY CARRIER LIFETIME

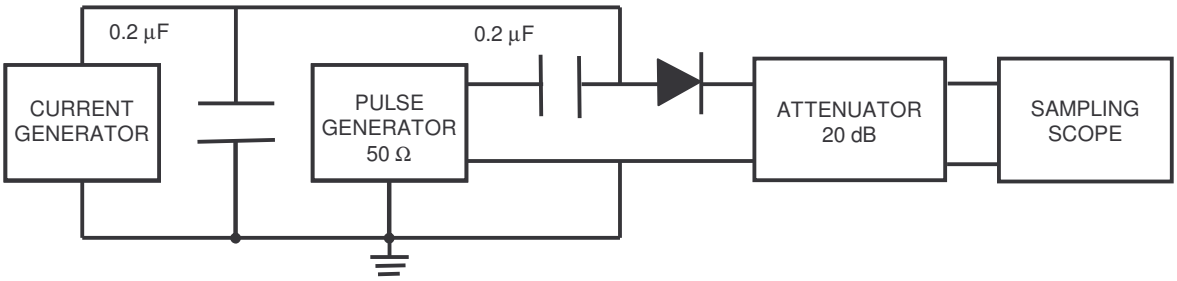

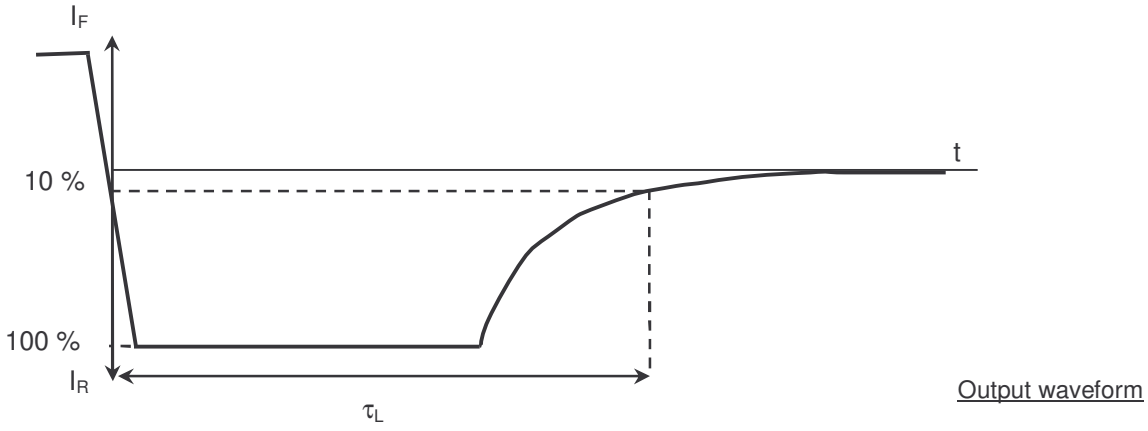

Output waveform

TABLE 5(a) - CONDITIONS FOR HIGH TEMPERATURE REVERSE BIAS BURN-IN

No	CHARACTERISTICS	SYMBOL	CONDITIONS	UNIT
1	Ambient Temperature	T_{amb}	+ 150 (-0 +3)	℃
2	Reverse Voltage	V_R	-187.5	V
3	Duration	t	Note 1	Hours

NOTES

1. See ESCC Generic Specification No. 5010.

TABLE 5(b) - CONDITIONS FOR POWER BURN-IN AND OPERATING LIFE TESTS

No	CHARACTERISTICS	SYMBOL	CONDITIONS	UNIT
1	Ambient Temperature	T_{amb}	+ 125 (-0 +3)	℃
2	Forward Current	I_F	Variants 37 to 41 : 20 Variants 01 to 06 and 08 to 13 : 50 Variants 15 to 20, 22 to 27 and 29 to 34 : 60 Variant 07 and 14 : 80 Variant 21, 28, 35 and 36 : 100	mA
3	Duration of Power Burn-In	t	Note 1	Hours
4	Duration of Operating Life Tests	t	Note 1	Hours

NOTES

1. See ESCC Generic Specification No. 5010.

FIGURE 5(a) - ELECTRICAL CIRCUIT FOR HIGH TEMPERATURE REVERSE BIAS BURN-IN

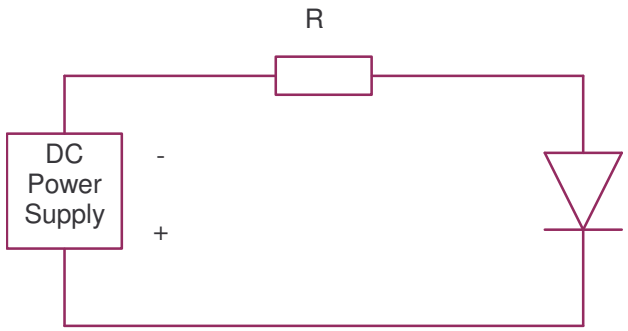

NOTES

1 : At the end of the HTRB, T_{amb} shall be decreased to room temperature and the reverse bias shall remain applied until T_{amb} < +35℃.

FIGURE 5(b) - ELECTRICAL CIRCUIT FOR POWER BURN-IN AND OPERATING LIFE TESTS

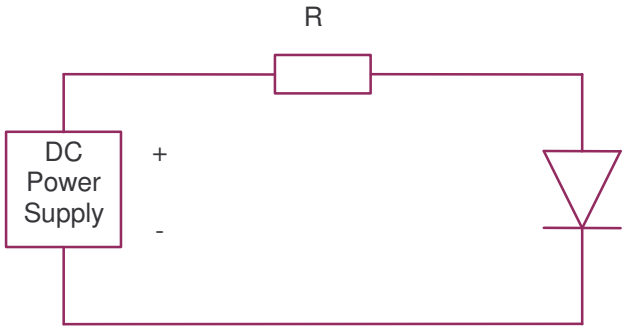

4.8 Environmental and endurance tests (Charts IV And V of ESCC Generic Specification No. 5010)

4.8.1 Electrical Measurements on Completion of Environmental Tests

The parameters to be measured on completion of environmental tests are scheduled in Table 2. Unless otherwise stated, the measurements shall be performed at T_{amb} = +22 ± 3°C.

4.8.2 Electrical Measurements at Intermediate Points and on Completion of Endurance Tests

The parameters to be measured at intermediate points and on completion of endurance tests are scheduled in Table 6. Unless otherwise stated, the measurements shall be performed at T_{amb} = +22 ± 3°C.

4.8.3 Conditions for Operating Life Tests (Part of Endurance Testing)

The requirements for operating life testing are specified in Section 9 of ESCC Generic Specification No. 5010. The conditions for operating life testing are specified in Table 5(b) of this specification.

4.8.4 Electrical Circuits for Operating Life Tests

The circuit to be used for performance of the operating life test shall be the same as shown in Figure 5(b) for Power Burn-in.

4.9 Total Dose Irradiation Testing

Not applicable.

4.10 Special testing

Not applicable.

TABLE 6 - ELECTRICAL MEASUREMENTS AT INTERMEDIATE POINTS AND ON COMPLETION OF ENDURANCE TESTING

No.	CHARACTERISTICS	SYMBOL	SPEC. AND/OR TEST METHOD	TEST CONDITIONS	LIMITS		UNIT
					MIN.	MAX.	
1	Reverse Current 1	I_{R1}	As per Table 2	As per Table 2	As per Table 2		µA
2	Reverse current 2	I_{R2}	As per Table 2	As per Table 2	As per Table 2		nA
3	Forward Voltage	V_F	As per Table 2	As per Table 2	As per Table 2		V
5	Total Capacitance	C_T	As per Table 2	As per Table 2	As per Table 2		pF

FIGURE 6 – BIAS CONDITIONS FOR IRRADATION TESTING

Not applicable

TABLE 7 – ELECTRICAL MEASUREMENTS DURING AND ON COMPLETION OF IRRADATION TESTING

Not applicable

APPENDIX 'A'

AGREED DEVIATIONS FOR CHELTON TELECOM & MICROWAVE (F)

ITEMS AFFECTED	DESCRIPTION OF DEVIATIONS
Para. 4.2.2	Para. 9.12, Radiographic Inspection of Chart III(a) : May be performed after Para. 9.7, Particle Impact Noise Detection (PIND) test, in X and Z axes only.
Para. 4.2.3	Para. 9.12, Radiographic Inspection : May be performed after Para. 9.7, PIND test of Chart II(b).

Pages 1 to 21

ORIGINAL

MICROWAVE, SILICON, PIN,

ULTRA FAST SWITCHING, DIODES,

BASED ON TYPES DH50033 to DH50037

ESCC Detail Specification No. 5513/032

MAY 2007

Issue / Rev.	Approved by		
	NAME	Date	VISA
3	R&D : S. PEREIRA	07/06/07	
	Production Management : S. CASSOU	07/06/07	
	Marketing : L. ETIENNE	11/06/07	
	Q.A : J-P. TETART	13-06-2007	

DOCUMENTATION CHANGE NOTICE

Rev. Letter	Rev. Date	CHANGE Reference / Item	Approved DCR No.
Issue 1 A	July 1997	Initial version	
Issue 2	January 2005	All Pages	
Issue 3	May 2007	(As agreed with ESA) All Pages	

TABLE OF CONTENTS

1. GENERAL 5

1.1 SCOPE 5
1.2 COMPONENT TYPE VARIANTS 5
1.3 MAXIMUM RATINGS 5
1.4 PARAMETERS DERATING INFORMATION 5
1.5 PHYSICAL DIMENSIONS 5
1.6 FUNCTIONAL DIAGRAM 5
1.7 HANDLING PRECAUTIONS 5

2. APPLICABLE DOCUMENTS 5

3. TERMS, DEFINITIONS, ABBREVIATIONS, SYMBOLS AND UNITS 5

4. REQUIREMENTS 13

4.1 GENERAL 13
4.2 DEVIATIONS FROM GENERIC SPECIFICATION 13
4.2.1 Deviations from Special In-process Controls 13
4.2.2 Deviations from Final Production Tests (Chart II) 13
4.2.3 Deviations from Burn-in and Electrical Measurements (Chart III) 13
4.2.4 Deviations from Qualification Tests (Chart IV) 13
4.2.5 Deviations from Lot Acceptance Tests (Chart V) 13
4.3 MECHANICAL AND ENVIRONMENTAL REQUIREMENTS 13
4.3.1 Dimension Check 13
4.3.2 Weight 13
4.3.3 Terminal Strength 14
4.3.1 Bond Strength 14
4.3.2 Die Shear 14
4.3.1 High Temperature Stabilisation Bake 14
4.4 MATERIAL AND FINISHES 14
4.4.1 Case 14
4.4.2 Lead Material and Finish 14
4.5 MARKING 14
4.5.1 General 14
4.5.2 Cathode Identification 15
4.5.3 The ESCC Component Number 15
4.5.4 Traceability Information 15
4.6 ELECTRICAL MEASUREMENTS 15
4.6.1 Electrical Measurements at Room Temperature 15
4.6.2 Electrical Measurements at High and Low Temperatures 15
4.6.3 Circuits for Elestrical Measurements 15
4.7 BURN-IN TESTS 15
4.7.1 Parameter Drift Values 15
4.7.2 Conditions for High Temperature Reverse Bias Burn-in 15
4.7.3 Conditions for Power Burn-in 15
4.7.4 Electrical Circuits for High Temperature Reverse Bias and Power Burn-in 15
4.8 ENVIRONMENTAL AND ENDURANCE TESTS (CHARTS IV AND V OF ESCC GENERIC SPECIFICATION NO. 5010) 19
4.8.1 Electrical Measurements on Completion of Environmental Tests 19
4.8.2 Electrical Measurements at Intermediate Points and on Completion of Endurance Tests 19
4.8.3 Conditions for Operating Life Tests (Part of Endurance Testing) 19
4.8.4 Electrical Circuits for Operating Life Tests 19
4.9 TOTAL DOSE IRRADIATION TESTING 19
4.10 SPECIAL TESTING 19

TABLES

1(a)	Type Variants	6
1(b)	Maximum Ratings	7
2(a)	Electrical Measurements at Room Temperature – D.C. Parameters	16
2(b)	Electrical Measurements at Room Temperature – A.C. Parameters	16
3	Electrical Measurements at High and Low Temperatures	16
4	Parameter drift Values	17
5(a)	Conditions for High Temperature Reverse Bias Burn-In	18
5(b)	Conditions for Power Burn-In and Operating Life Tests	18
6	Electrical Measurements at Intermediate Points and on Completion of Endurance Testing	20
7	Electrical Measurements During and on Completion of Irradiation Testing	20

FIGURES

1	Parameter Derating Information	7
2	Physical Dimensions	8
3	Functional Diagram	12
4	Circuits for Electrical Measurements	17
5(a)	Electrical circuit for High Temperature Reverse Bias Burn-in	18
5(b)	Electrical Circuit for Power Burn-in and Operating Life Tests	18
6	Bias Conditions for Irradiation Testing	20

APPENDICES (APPLICABLE TO SPECIFIC MANUFACTURERS ONLY)

'A'	Agreed Deviations for Chelton Telecom & Microwave (F)	21

1. GENERAL

1.1 Scope

This specification details the ratings, physical and electrical characteristics, test and inspection data for a Microwave Silicon PIN Ultra-Fast Switching Diode, based on Types DH50033 to DH50037. It shall be read in conjunction with ESCC Generic Specification No. 5010, the requirements of which are supplemented herein.

1.2 Component type variants

Variants of the basic diodes specified herein, which are also covered by this specification are given in Table 1(a).

1.3 Maximum ratings

The maximum ratings, which shall not be exceeded at any time during use or storage, applicable to the diodes specified herein, are as scheduled in Table 1(b).

1.4 Parameters derating information

The derating information applicable to the diodes specified herein is shown in Figure 1.

1.5 Physical dimensions

The physical dimensions of the diodes specified herein are shown in Figure 2.

1.6 Functional diagram

The functional diagram, showing lead identification, of the diodes specified herein, is shown in Figure 3.

1.7 Handling precautions

These devices are susceptible to be damaged by electrostatic discharge. Therefore, suitable precautions shall be employed for protection during all phases of manufacture, testing, packaging, shipment and any handling.

The components are categorised as Class 1 with a Minimum Critical Path Failure Voltage (MCPFV) of 500V.

2. APPLICABLE DOCUMENTS

The following documents form part of this specification and shall be read in conjunction with it :

(a) ESCC Generic Specification No. 5010 for Discrete Microwave Semiconductor Components.
(b) MIL-STD-750, Test Methods for Semiconductor Devices.

3. TERMS, DEFINITIONS, ABBREVIATIONS, SYMBOLS AND UNITS

For the purpose of this specification, the terms, definitions, abbreviations, symbols and units specified in ESCC Basic Specification No. 21300 shall apply. In addition the following symbols are used :

C_T = Total Capacitance.

TABLE 1(a) – TYPE VARIANTS

(1) VARIANT	(2) BASED ON TYPE	(3) FIGURE	(4) TOTAL CAPACITANCE C_T (pF) (Note 1) MAX	(5) FORWARD SERIES RESISTANCE R_{SF} (Ω) MAX	(6) MINORITY CARRIER LIFETIME τ_L (ns) MIN	(7) BODY-LID AND/OR LEAD MATERIAL AND FINISH
01	DH50033	2 (a)	0.25	1.8	40	D7 - E2
02		2 (b)				D7
03		2 (c)				D7 - E2
04		2 (d)				
05		2 (e)				
06		2 (f)				
07		2 (g)	0.32			A7 - D7
36		2 (h)	0.26			D7
08	DH50034	2 (a)	0.30	1.5	50	D7 - E2
09		2 (b)				D7
10		2 (c)				D7 - E2
11		2 (d)				
12		2 (e)				
13		2 (f)				
14		2 (g)	0.37			A7 - D7
37		2 (h)	0.31			D7
15	DH50035	2 (a)	0.36	1.0	50	D7 - E2
16		2 (b)				D7
17		2 (c)				D7 - E2
18		2 (d)				
19		2 (e)				
20		2 (f)				
21		2 (g)	0.43			A7 - D7
38		2 (h)	0.37			D7
22	DH50036	2 (a)	0.53	0.9	60	D7 - E2
23		2 (b)				D7
24		2 (c)				D7 - E2
25		2 (d)				
26		2 (e)				
27		2 (f)				
28		2 (g)	0.60			A7 - D7
39		2 (h)	0.54			D7
29	DH50037	2 (a)	0.73	0.7	80	D7 - E2
30		2 (b)				D7
31		2 (c)				D7 - E2
32		2 (d)				
33		2 (e)				
34		2 (f)				
35		2 (g)	0.80			A7 - D7
40		2 (h)	0.74			D7

NOTES

1. V_R = - 6.0V, f = 1.0MHz.

TABLE 1(b) - MAXIMUM RATINGS

No.	CHARACTERISTIC	SYMBOL	MAXIMUM RATINGS	UNIT	REMARKS
1	D.C. Reverse Voltage	V_R	-30	V	I_R = 10 µA
2	D.C. Forward Current (Continuous) Variants 36 to 40 Variants 01 to 06, 08 to 13, 15 to 20 Variants 22 to 27, 29 to 34 Variants 07, 14 and 21 Variants 28 and 35	I_F	 90 150 150 180 240	mA	Note 1
3	R.F. Power Dissipation Variants 36 to 40 Variants 01 to 06, 08 to 13, 15 to 20 Variants 22 to 27, 29 to 34 Variants 07, 14 and 21 Variants 28 and 35	P_{tOt}	 0.30 0.50 0.50 0.62 0.83	W	Note 1
4	Thermal Resistance Variants 36 to 40 Variants 01 to 06, 08 to 13, 15 to 20 Variants 22 to 27, 29 to 34 Variants 07, 14 and 21 Variants 28 and 35	$R_{TH(J-C)}$	 250 150 150 120 90	°C/W	-
5	Operating Temperature Range	T_{op}	-55 to +150	°C	T_{case}
6	Storage Temperature Range	T_{stg}	-65 to +175	°C	-
7	Soldering Temperature	T_{sol}	+ 230	°C	Note 2

NOTES

1. At T_{amb} = + 75°C. For derating at T_{amb} > + 75°C, see Figure 1.
2. Duration 5 seconds maximum and the same termination shall not be resoldered until 3 minutes have elapsed.

FIGURE 1 - PARAMETER DERATING INFORMATION

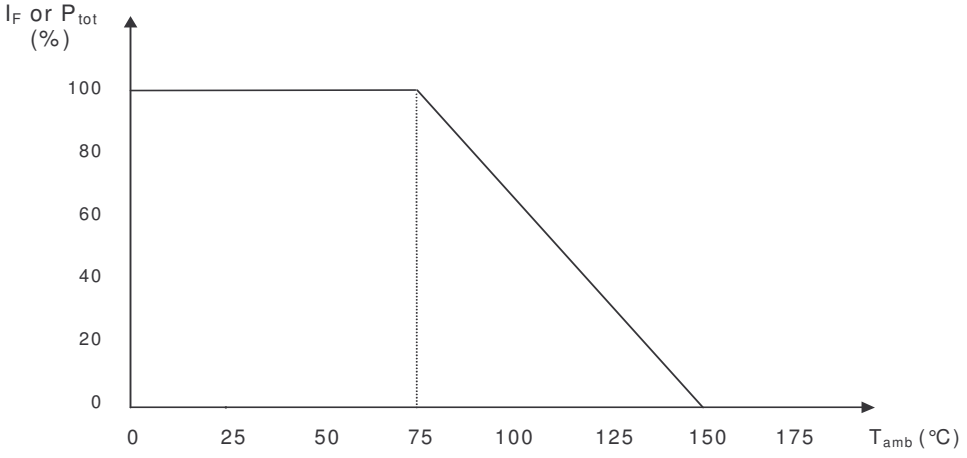

Forward Current or Power Dissipation versus Temperature

FIGURE 2 - PHYSICAL DIMENSIONS

FIGURE 2(a) – Variants 01, 08, 15, 22, 29

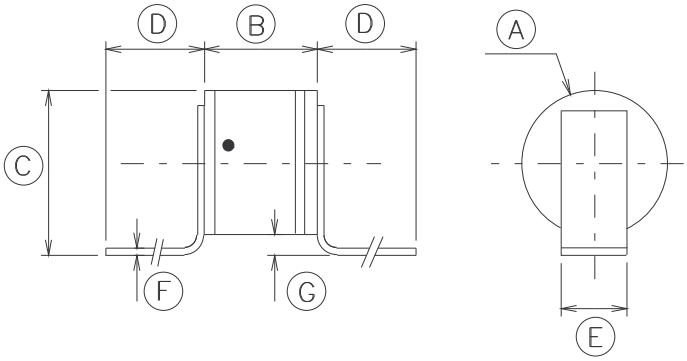

SYMBOL	MILLIMETERS	
	MIN.	MAX.
A	∅ 1.07	∅ 1.47
B	0.95	1.35
C	1.30	1.90
D	2.50	-
E	0.55	0.65
F	0.06	0.10
G	0.10	0.50

FIGURE 2(b) – Variants 02, 09, 16, 23, 30

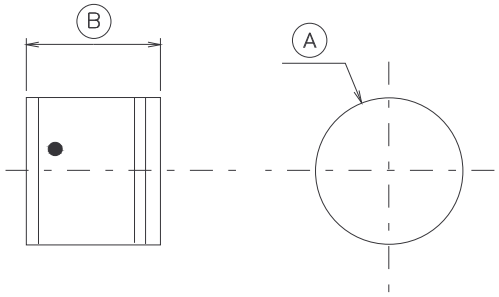

SYMBOL	MILLIMETERS	
	MIN.	MAX.
A	∅ 1.07	∅ 1.47
B	0.95	1.35

FIGURE 2 - PHYSICAL DIMENSIONS (CONTINUED)

FIGURE 2(c) – Variants 03, 10, 17, 24, 31

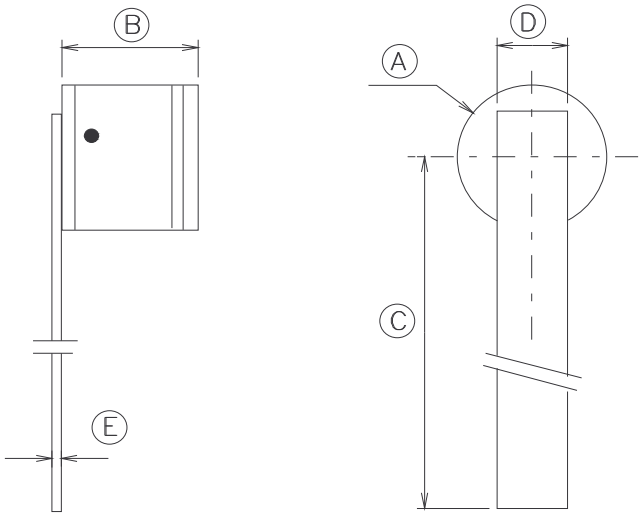

SYMBOL	MILLIMETERS	
	MIN.	MAX.
A	∅ 1.07	∅ 1.47
B	0.95	1.35
C	5.00	-
D	0.55	0.65
E	0.06	0.10

FIGURE 2(d) – Variants 04, 11, 18, 25, 32

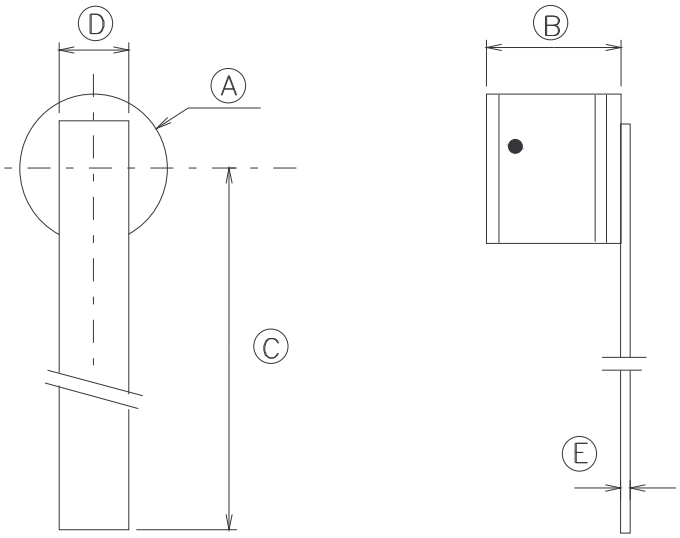

SYMBOL	MILLIMETERS	
	MIN.	MAX.
A	∅ 1.07	∅ 1.47
B	0.95	1.35
C	5.00	-
D	0.55	0.65
E	0.06	0.10

FIGURE 2 - PHYSICAL DIMENSIONS (CONTINUED)

FIGURE 2(e) – Variants 05, 12, 19, 26, 33

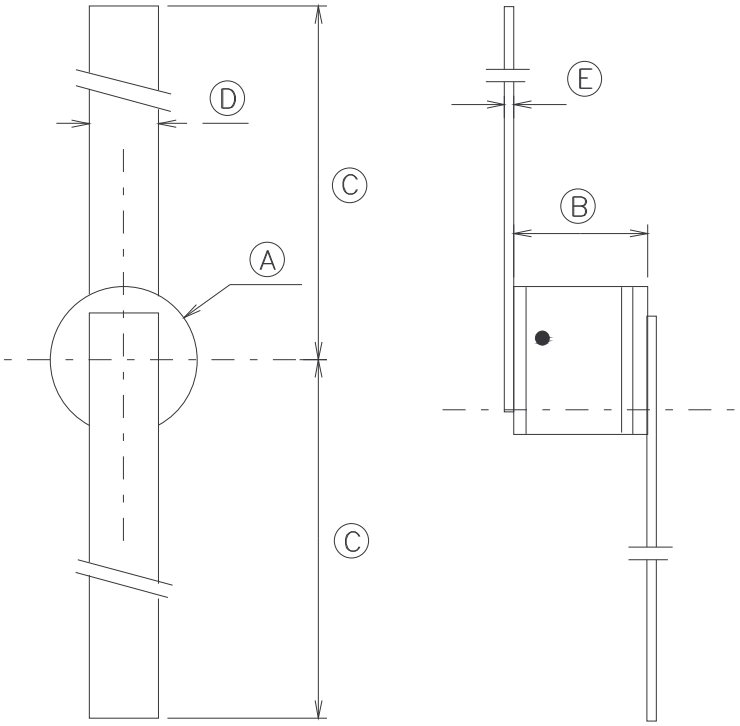

SYMBOL	MILLIMETERS	
	MIN.	MAX.
A	∅1.07	∅1.47
B	0.95	1.35
C	5.00	-
D	0.55	0.65
E	0.06	0.10

FIGURE 2(f) – Variants 06, 13, 20, 27, 34

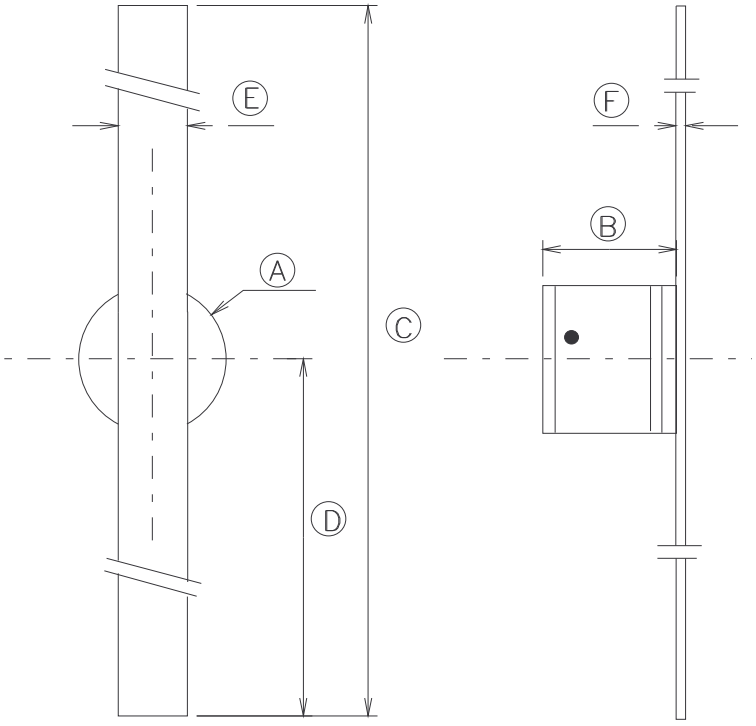

SYMBOL	MILLIMETERS	
	MIN.	MAX.
A	∅ 1.07	∅ 1.47
B	0.95	1.35
C	10.00	10.40
D	5.00	-
E	0.55	0.65
F	0.06	0.10

FIGURE 2 - PHYSICAL DIMENSIONS (CONTINUED)

FIGURE 2(g) – Variants 07, 14, 21, 28, 35

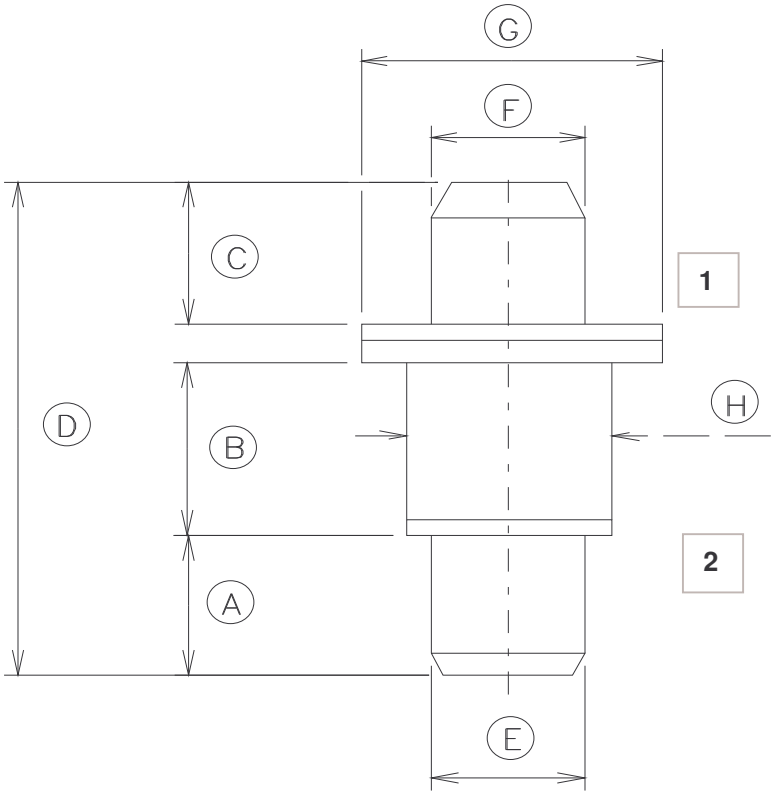

SYMBOL	MILLIMETERS	
	MIN.	MAX.
A	1.52	1.63
B	1.75	1.85
C	1.52	1.63
D	5.20	5.72
E	∅ 1.52	∅ 1.63
F	∅ 1.52	∅ 1.63
G	∅ 3.00	∅ 3.23
H	∅ 1.95	∅ 2.11

FIGURE 2 - PHYSICAL DIMENSIONS (CONTINUED)

FIGURE 2(h) – Variants 36 to 40

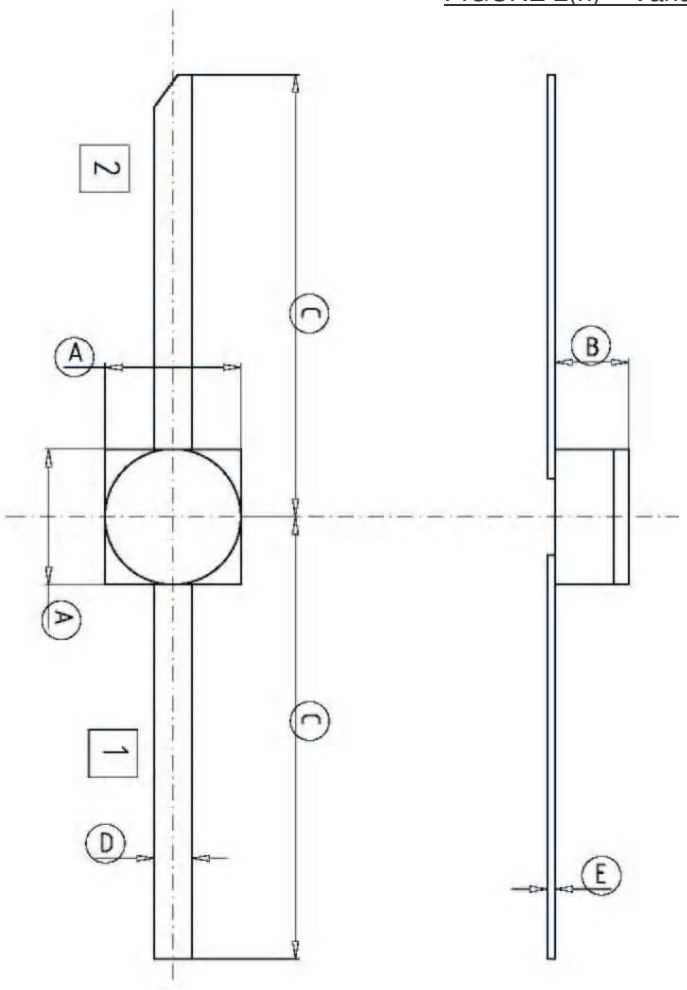

SYMBOL	MILLIMETERS	
	MIN.	MAX.
A	1.68	1.88
B	0.91	1.01
C	6.15	6.55
D	0.45	0.55
E	0.08	0.12

FIGURE 3 - FUNCTIONAL DIAGRAM



1 : Anode
2 : Cathode

NOTES

1. For variants 01 to 06, 08 to 13, 15 to 20, 22 to 27 and 29 to 34: The cathode end shall be marked with a black dot. The marking will not be on the cathode connection but adjacent to it as shown in Figures 2(a) to 2(f).
2. For variants 07, 14, 21, 28 and 35 terminal identification shall be by means of the physical configuration of the package as shown in Figure 2(g).
3. For variants 36 to 40 the cathode end shall be indicated by a 45° chamfer to the lead end as shown in Figure 2(h).

4. REQUIREMENTS

4.1 General

The complete requirements for procurement of the diodes specified herein shall be as stated in this specification and ESCC Generic Specification No. 5010 for Discrete Microwave Semiconductor Components. Deviations from the Generic Specification applicable to this specification only, are listed in Para. 4.2.

Deviations from the applicable Generic Specification and this Detail Specification, formally agreed with specific Manufacturers on the basis that the alternative requirements are equivalent to the ESCC requirements and do not affect the components' reliability, are listed in the appendices attached to this specification.

4.2 Deviations from generic specification

4.2.1 Deviations from Special In-process Controls

(a) Para. 5.2, Wafer Lot Acceptance : S.E.M. inspection shall be performed on 3 dice, after die separation.
(b) Para. 5.3, Wafer Screening (Chart II(a)) : Minority Carrier Lifetime shall be performed as an on-wafer measurement on a sample of 27 dice per wafer.

4.2.2 Deviations from Final Production Tests (Chart II(b))

(a) Para. 6.3, Pre-burn-in : Shall be performed in accordance with Para. 9.21(a) using the conditions specified in Table 5(a) of this specification for a duration of 48 hours minimum.
(b) Para 9.2.2, Die Shear : Individual forces need not be recorded and the minimum residual die area shall be ≥ 50% of the original die size.

4.2.3 Deviations from Burn-in and Electrical Measurements (Chart III(a))

(a) Para. 9.21, High Temperature Reverse Bias Burn-in : Shall be performed at 75% of rated V_R.

4.2.4 Deviations from Qualification Tests (Chart IV)

(a) Para. 9.2.4, Die-Shear : Individual forces need not be recorded and the minimum residual die area shall be ≥ 50% of the original die size.
(b) Para. 9.14, Vibration Test : Shall not be performed.
(c) Para. 9.15, Constant Acceleration : Shall not be performed.
(d) Para. 9.23, Special Testing : Shall not be performed.

4.2.5 Deviations from Lot Acceptance Tests (Chart V)

(a) Para. 9.14, Vibration : Shall not be performed.
(b) Para. 9.15, Constant Acceleration : Shall not be performed.
(c) Para. 9.23, Special Testing : Shall not be performed.

4.3 Mechanical and environmental requirements

4.3.1 Dimension Check

The dimensions of the diodes specified herein shall be checked. They shall conform to those shown in Figure 2.

4.3.2 Weight

The maximum weight of the diodes specified herein shall be as follows :
- Variants 01 to 06, 08 to 25, 15 to 20, 22 to 27, 29 to 24, 36 to 40 : 0.02g.
- Variants 07, 14, 21, 28 and 35 : 0.15g

4.3.3 Terminal Strength

The requirements for terminal strength are specified in Section 9 of ESCC Generic Specification No. 5010. The test conditions shall be as follows :

(a) Condition : 'A' (tension).

Variants 01, 03 to 06, 08, 10 to 13, 15, 17 to 20, 22, 24 to 27, 29, 31 to 34 and 36 to 40 :

- Force : 1.25 N
- Duration : 10 seconds

4.3.4 Bond Strength

The requirements for bond strength are specified in Section 9 of ESCC Generic Specification No. 5010. The test conditions shall be as follows :

(a) Condition : 'A' (tension).
(b) Separating Force : 0.03N minimum.

4.3.5 Die Shear

The requirements for die shear are specified in Section 9 of ESCC Generic Specification No. 5010. The test conditions shall be as follows :

(a) Semiconductor material remaining : 50% minimum.

4.3.6 High Temperature Stabilisation Bake

The requirements for high temperature stabilisation bake are specified in Section 9 of ESCC Generic Specification No. 5010. The temperature to be applied shall be + 175 (+0 –3)°C.

4.4 Materials and finishes

The materials and finishes shall be as specified herein. Where a definite material is not specified, a material which will enable the diodes specified herein to meet the performance requirements of this specification shall be used. Acceptance or approval of any constituent material shall not guarantee acceptance of the finished product.

4.4.1 Case

The case shall be hermetically sealed and have a ceramic body. The lid shall be welded or preform soldered.

4.4.2 Lead Materials and Finish

(a) For variants 01, 03 to 06, 08,10 to 13, 15, 17 to 20, 22, 24 to 27, 29 and 31 to 34, the body and lid material shall be Type 'D' with Type '7' finish and the lead material shall be Type 'E' with Type '2' finish in accordance with the requirements of ESCC Basic Specification No 23500.
(b) For variants 02, 09, 16, 23 and 30, the body and lid material shall be Type 'D' with Type '7' finish in accordance with the requirements of ESCC Basic Specification No 23500.
(c) For variants 07, 14, 21, 28 and 35, the body material shall be Type 'A' with Type '7' finish and the lid material shall be Type 'D' with Type '7' finish in accordance with the requirements of ESCC Basic Specification No 23500.
(d) For variants 36 to 40, the lead material shall be Type 'D' with Type '7' finish in accordance with the requirements of ESCC Basic Specification No 23500.

4.5 Marking

4.5.1 General

The marking of components delivered to this specification shall be in accordance with the requirements of ESCC Basic Specification No. 21700 and the following paragraphs. When the component is too small to accommodate all of the marking specified, as much as space permits shall be marked and the marking information, in full, shall accompany the component in its primary package.

The information to be marked and the order of precedence, shall be as follows :
(a) Cathode Identification.
(b) The ESCC Component Number.
(c) Traceability Information.

4.5.2 Cathode Identification

Cathode Identification shall be as shown in Figures 2 and 3 of this specification.

4.5.3 The ESCC Component Number

Each component shall bear the ESCC Component Number which shall be constituted and marked as follows:

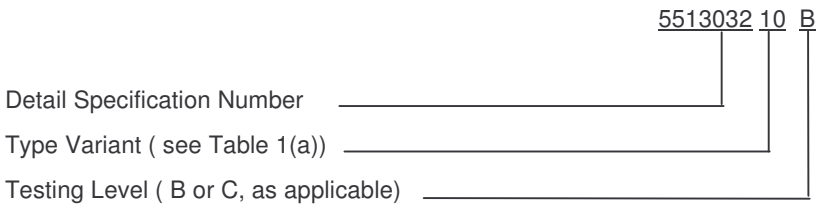

4.5.4 Traceability Information

Each component shall be marked in respect of traceability information as defined in ESCC Basic Specification No. 21700.

4.6 Electrical measurements

4.6.1 Electrical Measurements at Room Temperature

The parameters to be measured at room temperature are scheduled in Table 2. Unless otherwise specified, the measurements shall be performed at T_{amb} = + 22 ± 3°C.

4.6.2 Electrical Measurements at High and Low Temperatures

The parameters to be measured at high and low temperatures are scheduled in Table 3. Unless otherwise specified, the measurements shall be performed at + 150 °C (+0-3)°C.

4.6.3 Circuits for Electrical Measurements

Circuits for use in performed electrical measurements listed in Table 2 of this specification are shown in Figure 4.

4.7 Burn-in tests

Burn-in shall be Category 2 of Chart III (a) of Generic Specification N° 5010.

4.7.1 Parameters Drift Values

The parameter drift values applicable to burn-in are specified in Table 4 of this specification. Unless otherwise stated, the measurements shall be performed at T_{amb} = + 22 ± 3°C. The parameters drift values (Δ) applicable to the scheduled parameters shall not be exceeded. In addition to these drift value requirements for a given parameter, the appropriate limit value specified in Table 2 shall not be exceeded.

4.7.2 Conditions for High Temperature Reverse Bias Burn-in

The requirements for the High Temperature Reverse Bias Burn-in are specified in Section 7 of ESCC Generic Specification No. 5010. The conditions for High Temperature Reverse Bias Burn-in shall be as specified in Table 5(a) of this specification.

4.7.3 Conditions for Power Burn-in

The requirements of Power Burn-in are specified in Section 7 of ESCC Generic Specification No. 5010. The conditions for Power Burn-in shall be as specified in Table 5(b) of this specification.

4.7.4 Electrical Circuits for High Temperature Reverse Bias and Power Burn-in

Circuits for use in performing the High Temperature Reverse Bias Burn-in test are shown in Figures 5(a) and 5(b) of this specification.

TABLE 2(a) - ELECTRICAL MEASUREMENTS AT ROOM TEMPERATURE - DC PARAMETERS

No.	CHARACTERISTICS	SYMBOL	MIL-STD-750 TEST METHOD	TEST CONDITIONS	LIMITS		UNIT
					MIN.	MAX	
1	Reverse Current 1	I_{R1}	4016	V_R = - 30V	-	10	µA
2	Reverse Current 2	I_{R2}	4016	V_R = - 15V	-	100	nA
3	Forward Voltage	V_F	4011	I_F = 10 mA	-	1.1	V
4	Thermal Resistance	$R_{TH(J-C)}$	3101 Variants 01 to 06, 08 to 13, 15 to 20, 22 to 27, 29 to 34 and 36 to 40. Variants 07, 14, 21, 28, 35.	Note 1 Power = 0.25 W Power = 0.50 W	-	Note 2	℃/W

NOTES
1. Pulsed measurement, pulse width = 10ms.
2. See Item 4 of Table 1(b).

TABLE 2(b) - ELECTRICAL MEASUREMENTS AT ROOM TEMPERATURE - AC PARAMETERS

No.	CHARACTERISTICS	SYMBOL	TEST FIG.	MIL-STD-750 TEST METHOD	TEST CONDITIONS	LIMITS		UNIT
						MIN.	MAX	
5	Total Capacitance	C_T	-	4001	V_R = -6V f = 1 MHz	-	Note 1	pF
6	Forward Series Resistance	R_{SF}	-	4056	I_F = 10 mA f_0 = 120 MHz	-	Note 2	Ω
7	Minority Carrier Lifetime Note 3	τ_L	4(a)	-	I_F = 10 mA I_R = 6 mA	-	Note 4	ns

NOTES
1. See column 4 of Table 1(a). Junction capacitance = Total capacitance – Case capacitance.
   Typical case capacitance for cases in Figures 2(a) to 2(f) = 0.12 pF.
   Typical case capacitance for cases in Figure 2(g) = 0.18 pF.
   Typical case capacitance for cases in Figure 2(h) = 0.13 pF.
2. See column 5 of Table 1(a).
3. Only during Wafer Screening on a sample of 27 dice per wafer.
4. See Column 6 Table 1(a).

TABLE 3 - ELECTRICAL MEASUREMENTS AT HIGH AND LOW TEMPERATURES

No.	CHARACTERISTICS	SYMBOL	MIL-STD-750 TEST METHOD	TEST CONDITIONS	LIMITS		UNIT
					MIN.	MAX	
2	Reverse Current 2	I_{R2}	4016	V_R = -15V	-	1	µA

TABLE 4 - PARAMETER DRIFT VALUES

No.	CHARACTERISTICS	SYMBOL	SPEC. AND/OR TEST METHOD	TEST CONDITIONS	CHANGE LIMITS (Δ)	UNIT
2	Reverse Current 2	I_{R2}	As per Table 2	As per Table 2	± 10 (1) or (2) ± 100 (1)	nA %
3	Forward Voltage	V_F			± 5 (1)	%
5	Total Capacitance	C_T			± 5 (1) (3)	%

NOTES

1. Δ1 = Δ2 = Δ3.
2. Whichever is the greater, referred to the initial measurement.
3. Rounded upwards to the nearest 0.01 pF value. If C_T < 0.25 pF then Δ = ± 10%.

FIGURE 4 - CIRCUITS FOR ELECTRICAL MEASUREMENTS

FIGURE 4(a) - CIRCUIT FOR MESUREMENT OF MINORITY CARRIER LIFETIME

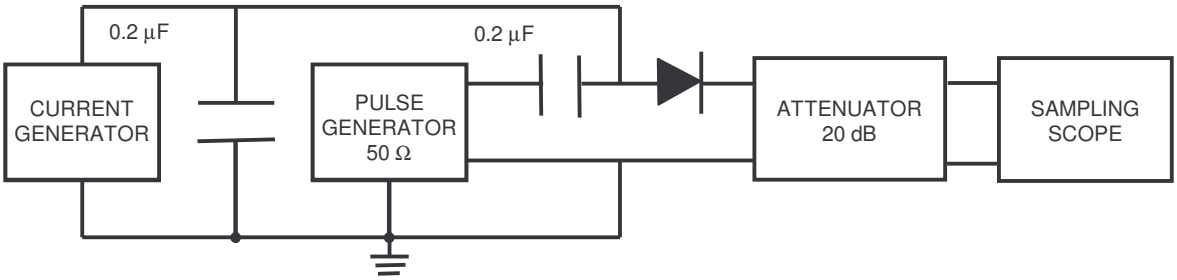

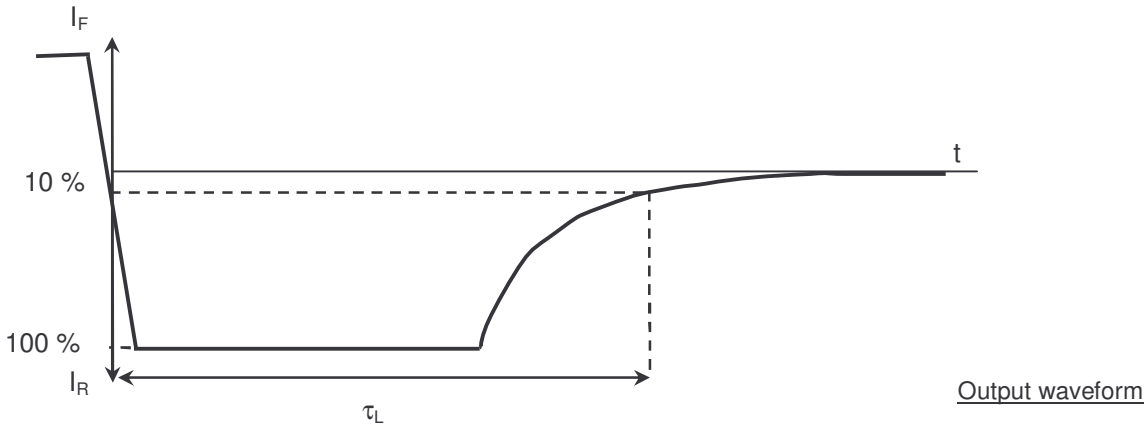

Output waveform

TABLE 5(a) - CONDITIONS FOR HIGH TEMPERATURE REVERSE BIAS BURN-IN

No	CHARACTERISTICS	SYMBOL	CONDITIONS	UNIT
1	Ambient Temperature	T_{amb}	+ 150 (-0 +3)	℃
2	Reverse Voltage	V_R	-22.5	V
3	Duration	t	Note 1	Hours

NOTES
1. See ESCC Generic Specification No. 5010.

TABLE 5(b) - CONDITIONS FOR POWER BURN-IN AND OPERATING LIFE TESTS

No	CHARACTERISTICS	SYMBOL	CONDITIONS	UNIT
1	Ambient Temperature	T_{amb}	+ 125 (-0 +3)	℃
2	Forward Current	I_F	Variants 36 to 40 : 30 Variants 01 to 06, 08 to 13, 15 to 20 : 50 Variants 22 to 27 and 29 to 34 : 50 Variants 07, 14 and 21 : 60 Variants 28 and 35 : 80	mA
3	Duration of Power Burn-In	t	Note 1	Hours
4	Duration of Operating Life Tests	t	Note 1	Hours

NOTES
1. See ESCC Generic Specification No. 5010.

FIGURE 5(a) - ELECTRICAL CIRCUIT FOR HIGH TEMPERATURE REVERSE BIAS BURN-IN

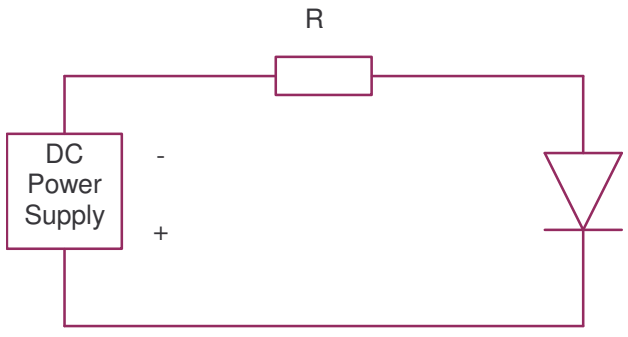

NOTES
1 : At the end of the HTRB, T_{amb} shall be decreased to room temperature and the reverse bias shall remain applied until T_{amb} < +35℃.

FIGURE 5(b) - ELECTRICAL CIRCUIT FOR POWER BURN-IN AND OPERATING LIFE TESTS

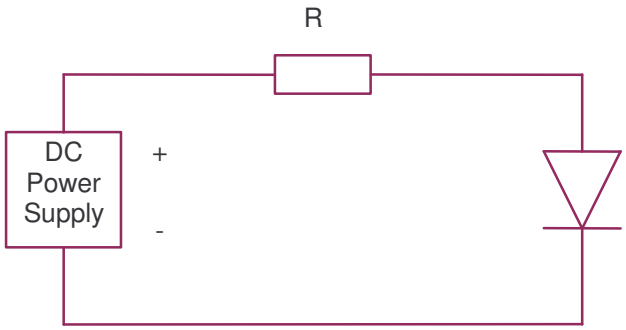

4.8 Environmental and endurance tests (Charts IV And V of ESCC Generic Specification No. 5010)

4.8.1 Electrical Measurements on Completion of Environmental Tests

The parameters to be measured on completion of environmental tests are scheduled in Table 2. Unless otherwise stated, the measurements shall be performed at T_{amb} = +22 ± 3°C.

4.8.2 Electrical Measurements at Intermediate Points and on Completion of Endurance Tests

The parameters to be measured at intermediate points and on completion of endurance tests are scheduled in Table 6. Unless otherwise stated, the measurements shall be performed at T_{amb} = +22 ± 3°C.

4.8.3 Conditions for Operating Life Tests (Part of Endurance Testing)

The requirements for operating life testing are specified in Section 9 of ESCC Generic Specification No. 5010. The conditions for operating life testing are specified in Table 5(b) of this specification.

4.8.4 Electrical Circuits for Operating Life Tests

The circuit to be used for performance of the operating life test shall be the same as shown in Figure 5(b) for Power Burn-in.

4.9 Total Dose Irradiation Testing

Not applicable.

4.10 Special testing

Not applicable.

TABLE 6 - ELECTRICAL MEASUREMENTS AT INTERMEDIATE POINTS AND ON COMPLETION OF ENDURANCE TESTING

No.	CHARACTERISTICS	SYMBOL	SPEC. AND/OR TEST METHOD	TEST CONDITIONS	LIMITS		UNIT
					MIN.	MAX.	
1	Reverse Current 1	I_{R1}	As per Table 2	As per Table 2	As per Table 2		µA
2	Reverse current 2	I_{R2}	As per Table 2	As per Table 2	As per Table 2		nA
3	Forward Voltage	V_F	As per Table 2	As per Table 2	As per Table 2		V
5	Total Capacitance	C_T	As per Table 2	As per Table 2	As per Table 2		pF

FIGURE 6 – BIAS CONDITIONS FOR IRRADATION TESTING

Not applicable

TABLE 7 – ELECTRICAL MEASUREMENTS DURING AND ON COMPLETION OF IRRADATION TESTING

Not applicable

APPENDIX 'A'

AGREED DEVIATIONS FOR CHELTON TELECOM & MICROWAVE (F)

ITEMS AFFECTED	DESCRIPTION OF DEVIATIONS
Para. 4.2.2	Para. 9.12, Radiographic Inspection of Chart III(a) : May be performed after Para. 9.7, Particle Impact Noise Detection (PIND) test, in X and Z axes only.
Para. 4.2.3	Para. 9.12, Radiographic Inspection : May be performed after Para. 9.7, PIND test of Chart II(b).

Pages 1 to 23

ORIGINAL

MICROWAVE, SILICON, PIN,

FAST SWITCHING, DIODES,

BASED ON TYPES DH50151 to DH50157

ESCC Detail Specification No. 5513/031

MAY 2007

Issue / Rev.	Approved by		
	NAME	Date	VISA
3	R&D : S. PEREIRA	07/06/07	
	Production Management : S. CASSOU	08/06/07	
	Marketing : L. ETIENNE	11/06/07	
	Q.A : J-P. TETART	13-06-2007	

DOCUMENTATION CHANGE NOTICE

Rev. Letter	Rev. Date	CHANGE Reference / Item	Approved DCR No.
Issue 1 A	July 1997	Initial version	
Issue 2	January 2005	All Pages	
Issue 3	May 2007	(As agreed with ESA) All Pages	

TABLE OF CONTENTS

1. GENERAL 5
1.1 SCOPE 5
1.2 COMPONENT TYPE VARIANTS 5
1.3 MAXIMUM RATINGS 5
1.4 PARAMETERS DERATING INFORMATION 5
1.5 PHYSICAL DIMENSIONS 5
1.6 FUNCTIONAL DIAGRAM 5
1.7 HANDLING PRECAUTIONS 5
2. APPLICABLE DOCUMENTS 5
3. TERMS, DEFINITIONS, ABBREVIATIONS, SYMBOLS AND UNITS 5
4. REQUIREMENTS 15
4.1 GENERAL 15
4.2 DEVIATIONS FROM GENERIC SPECIFICATION 15
4.2.1 Deviations from Special In-process Controls 15
4.2.2 Deviations from Final Production Tests (Chart II) 15
4.2.3 Deviations from Burn-in and Electrical Measurements (Chart III) 15
4.2.4 Deviations from Qualification Tests (Chart IV) 15
4.2.5 Deviations from Lot Acceptance Tests (Chart V) 15
4.3 MECHANICAL AND ENVIRONMENTAL REQUIREMENTS 15
4.3.1 Dimension Check 15
4.3.2 Weight 15
4.3.3 Terminal Strength 16
4.3.1 Bond Strength 16
4.3.2 Die Shear 16
4.3.1 High Temperature Stabilisation Bake 16
4.4 MATERIAL AND FINISHES 16
4.4.1 Case 16
4.4.2 Lead Material and Finish 16
4.5 MARKING 16
4.5.1 General 16
4.5.2 Cathode Identification 17
4.5.3 The ESCC Component Number 17
4.5.4 Traceability Information 17
4.6 ELECTRICAL MEASUREMENTS 17
4.6.1 Electrical Measurements at Room Temperature 17
4.6.2 Electrical Measurements at High and Low Temperatures 17
4.6.3 Circuits for Elestrical Measurements 17
4.7 BURN-IN TESTS 17
4.7.1 Parameter Drift Values 17
4.7.2 Conditions for High Temperature Reverse Bias Burn-in 17
4.7.3 Conditions for Power Burn-in 17
4.7.4 Electrical Circuits for High Temperature Reverse Bias and Power Burn-in 17
4.8 ENVIRONMENTAL AND ENDURANCE TESTS (CHARTS IV AND V OF ESCC GENERIC SPECIFICATION NO. 5010) 21
4.8.1 Electrical Measurements on Completion of Environmental Tests 21
4.8.2 Electrical Measurements at Intermediate Points and on Completion of Endurance Tests 21
4.8.3 Conditions for Operating Life Tests (Part of Endurance Testing) 21
4.8.4 Electrical Circuits for Operating Life Tests 21
4.9 TOTAL DOSE IRRADIATION TESTING 21
4.10 SPECIAL TESTING 21

TABLES

1(a)	Type Variants	6
1(b)	Maximum Ratings	8
2(a)	Electrical Measurements at Room Temperature – D.C. Parameters	18
2(b)	Electrical Measurements at Room Temperature – A.C. Parameters	18
3	Electrical Measurements at High and Low Temperatures	18
4	Parameter drift Values	19
5(a)	Conditions for High Temperature Reverse Bias Burn-In	20
5(b)	Conditions for Power Burn-In and Operating Life Tests	20
6	Electrical Measurements at Intermediate Points and on Completion of Endurance Testing	22
7	Electrical Measurements During and on Completion of Irradiation Testing	22

FIGURES

1	Parameter Derating Information	9
2	Physical Dimensions	10
3	Functional Diagram	14
4	Circuits for Electrical Measurements	19
5(a)	Electrical circuit for High Temperature Reverse Bias Burn-in	20
5(b)	Electrical Circuit for Power Burn-in and Operating Life Tests	21
6	Bias Conditions for Irradiation Testing	22

APPENDICES (APPLICABLE TO SPECIFIC MANUFACTURERS ONLY)

'A'	Agreed Deviations for Chelton Telecom & Microwave (F)	23

1. GENERAL

1.1 Scope

This specification details the ratings, physical and electrical characteristics, test and inspection data for a Microwave Silicon PIN Fast Switching Diode, based on Types DH50151 to DH50157. It shall be read in conjunction with ESCC Generic Specification No. 5010, the requirements of which are supplemented herein.

1.2 Component type variants

Variants of the basic diodes specified herein, which are also covered by this specification are given in Table 1(a).

1.3 Maximum ratings

The maximum ratings, which shall not be exceeded at any time during use or storage, applicable to the diodes specified herein, are as scheduled in Table 1(b).

1.4 Parameters derating information

The derating information applicable to the diodes specified herein is shown in Figure 1.

1.5 Physical dimensions

The physical dimensions of the diodes specified herein are shown in Figure 2.

1.6 Functional diagram

The functional diagram, showing lead identification, of the diodes specified herein, is shown in Figure 3.

1.7 Handling precautions

These devices are susceptible to be damaged by electrostatic discharge. Therefore, suitable precautions shall be employed for protection during all phases of manufacture, testing, packaging, shipment and any handling.

The components are categorised as Class 2 with a Minimum Critical Path Failure Voltage (MCPFV) of 1400V.

2. APPLICABLE DOCUMENTS

The following documents form part of this specification and shall be read in conjunction with it :

(a) ESCC Generic Specification No. 5010 for Discrete Microwave Semiconductor Components.
(b) MIL-STD-750, Test Methods for Semiconductor Devices.

3. TERMS, DEFINITIONS, ABBREVIATIONS, SYMBOLS AND UNITS

For the purpose of this specification, the terms, definitions, abbreviations, symbols and units specified in ESCC Basic Specification No. 21300 shall apply. In addition the following symbols are used :

C_T = Total Capacitance.

TABLE 1(a) – TYPE VARIANTS

(1) VARIANT	(2) BASED ON TYPE	(3) FIGURE	(4) TOTAL CAPACITANCE C_T (pF) (Note 1) MAX	(5) FORWARD SERIES RESISTANCE R_{SF} (Ω) MAX	(6) MINORITY CARRIER LIFETIME τ_L (ns) MIN	(7) BODY-LID AND/OR LEAD MATERIAL AND FINISH
01	DH50151	2 (a)	0.19	2.0	160	D7 - E2
02		2 (b)				D7
03		2 (c)				D7 - E2
04		2 (d)				
05		2 (e)				
06		2 (f)				
07		2 (g)	0.26			A7 - D7
50		2 (h)	0.20			D7
08	DH50152	2 (a)	0.21	1.7	185	D7 - E2
09		2 (b)				D7
10		2 (c)				D7 - E2
11		2 (d)				
12		2 (e)				
13		2 (f)				
14		2 (g)	0.28			A7 - D7
51		2 (h)	0.22			D7
15	DH50153	2 (a)	0.25	1.5	240	D7 - E2
16		2 (b)				D7
17		2 (c)				D7 - E2
18		2 (d)				
19		2 (e)				
20		2 (f)				
21		2 (g)	0.32			A7 - D7
52		2 (h)	0.26			D7
22	DH50154	2 (a)	0.30	1.4	400	D7 - E2
23		2 (b)				D7
24		2 (c)				D7 - E2
25		2 (d)				
26		2 (e)				
27		2 (f)				
28		2 (g)	0.37			A7 - D7
53		2 (h)	0.31			D7

NOTES

1. V_R = - 50.0V, f = 1.0MHz

TABLE 1(a) – TYPE VARIANTS (CONTINUED)

(1) VARIANT	(2) BASED ON TYPE	(3) FIGURE	(4) TOTAL CAPACITANCE C_T (pF) (Note 1) MAX	(5) FORWARD SERIES RESISTANCE R_{SF} (Ω) MAX	(6) MINORITY CARRIER LIFETIME τ_L (ns) MIN	(7) BODY-LID AND/OR LEAD MATERIAL AND FINISH
29	DH50155	2 (a)	0.36	1.0	440	D7 - E2
30		2 (b)				D7
31		2 (c)				D7 - E2
32		2 (d)				
33		2 (e)				
34		2 (f)				
35		2 (g)	0.43			A7 - D7
54		2 (h)	0.37			D7
36	DH50156	2 (a)	0.53	0.8	640	D7 - E2
37		2 (b)				D7
38		2 (c)				D7 - E2
39		2 (d)				
40		2 (e)				
41		2 (f)				
42		2 (g)	0.60			A7 - D7
55		2 (h)	0.54			D7
43	DH50157	2 (a)	0.73	0.6	760	D7 - E2
44		2 (b)				D7
45		2 (c)				D7 - E2
46		2 (d)				
47		2 (e)				
48		2 (f)				
49		2 (g)	0.80			A7 - D7
56		2 (h)	0.74			D7

NOTES

1. V_R = - 50.0V, f = 1.0MHz

TABLE 1(b) - MAXIMUM RATINGS

No.	CHARACTERISTIC	SYMBOL	MAXIMUM RATINGS	UNIT	REMARKS
1	D.C. Reverse Voltage	V_R	-150	V	I_R = 10 µA
2	D.C. Forward Current (Continuous) Variants 50 to 56 Variants 01 to 06, 08 to 13, 15 to 20 and 22 to 27 Variants 29 to 34, 36 to 41 and 43 to 48 Variant 07, 14, 21 and 28 Variant 35, 42 and 49	I_F	 90 150 180 240 300	mA	Note 1
3	R.F. Power Dissipation Variants 50 to 56 Variants 01 to 06, 08 to 13, 15 to 20 and 22 to 27 Variants 29 to 34, 36 to 41 and 43 to 48 Variant 07, 14, 21 and 28 Variant 35, 42 and 49	P_{tOt}	 0.30 0.50 0.62 0.83 1.25	W	Note 1
4	Thermal Resistance (Junction to Case) Variants 50 to 56 Variants 01 to 06, 08 to 13, 15 to 20 and 22 to 27 Variants 29 to 34, 36 to 41 and 43 to 48 Variant 07, 14, 21 and 28 Variant 35, 42 and 49	$R_{TH(J-C)}$	 250 150 120 90 60	°C/W	-
5	Operating Temperature Range	T_{op}	-55 to +150	°C	T_{case}
6	Storage Temperature Range	T_{stg}	-65 to +175	°C	-
7	Soldering Temperature	T_{sol}	+ 230	°C	Note 2

NOTES

1. At T_{case} = + 75°C. For derating at T_{case} > + 75°C, see Figure 1.
2. Duration 5 seconds maximum and the same termination shall not be resoldered until 3 minutes have elapsed.

FIGURE 1 - PARAMETER DERATING INFORMATION

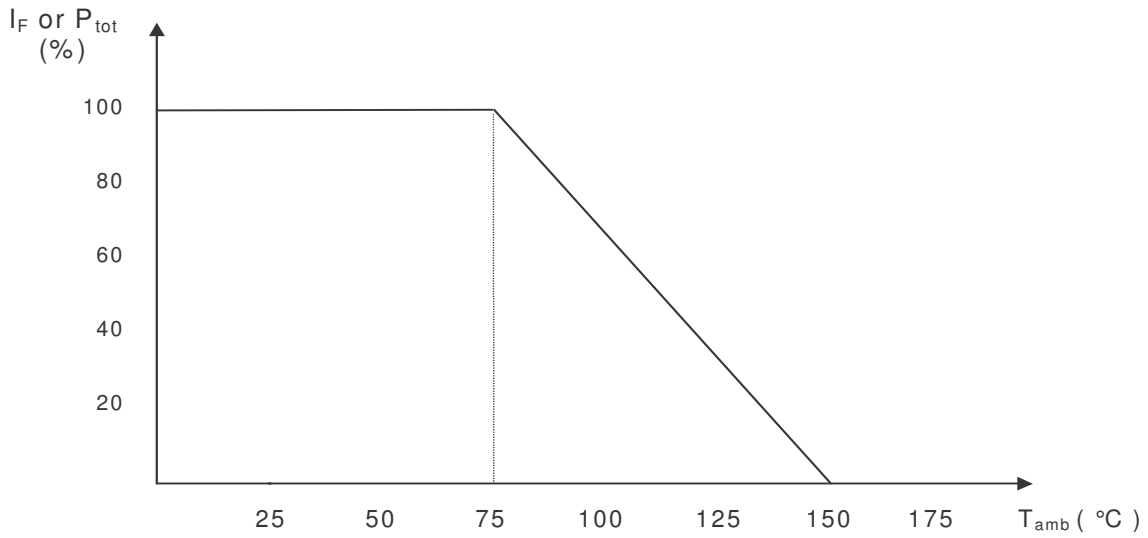

Forward Current or Power Dissipation versus Temperature

FIGURE 2 - PHYSICAL DIMENSIONS

FIGURE 2(a) – Variants 01, 08, 15, 22, 29, 36, 43

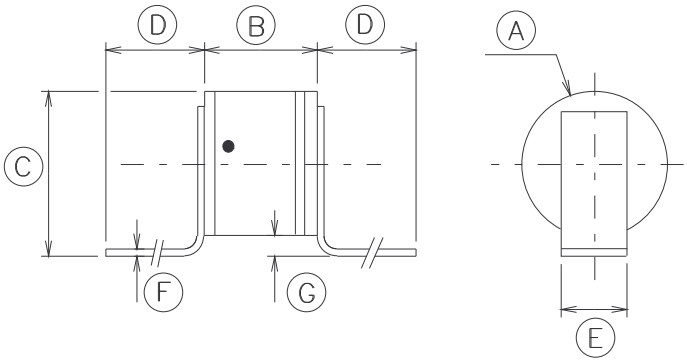

SYMBOL	MILLIMETERS	
	MIN.	MAX.
A	∅ 1.07	∅ 1.47
B	0.95	1.35
C	1.30	1.90
D	2.50	-
E	0.55	0.65
F	0.06	0.10
G	0.10	0.50

FIGURE 2(b) – Variants 02, 09, 16, 23, 30, 37, 44

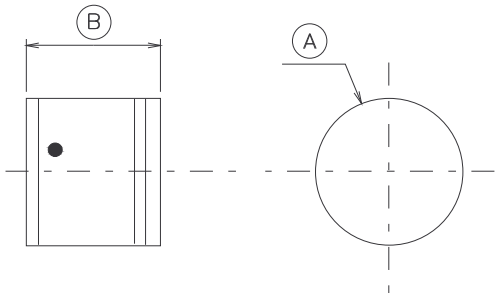

SYMBOL	MILLIMETERS	
	MIN.	MAX.
A	∅ 1.07	∅ 1.47
B	0.95	1.35

FIGURE 2 - PHYSICAL DIMENSIONS (CONTINUED)

FIGURE 2(c) – Variants 03, 10, 17, 24, 31, 38, 45

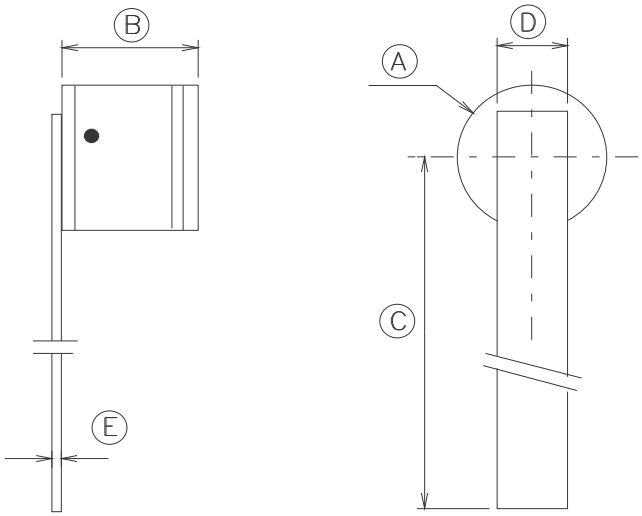

SYMBOL	MILLIMETERS	
	MIN.	MAX.
A	∅ 1.07	∅ 1.47
B	0.95	1.35
C	5.00	-
D	0.55	0.65
E	0.06	0.10

FIGURE 2(d) – Variants 04, 11, 18, 25, 32, 39, 46

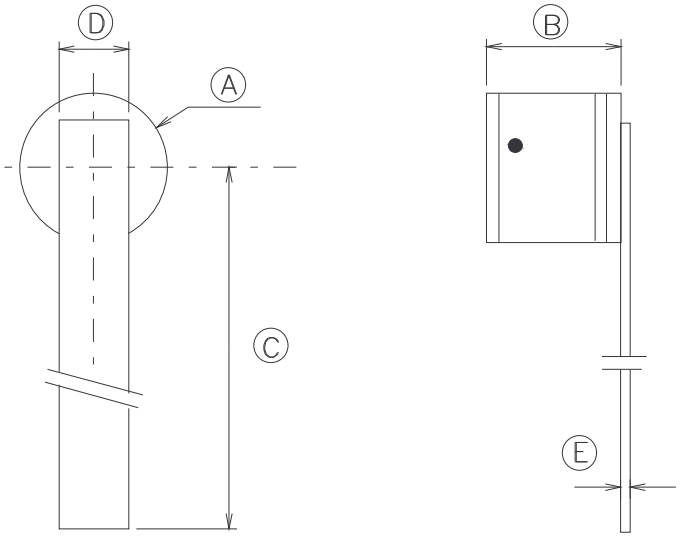

SYMBOL	MILLIMETERS	
	MIN.	MAX.
A	∅ 1.07	∅ 1.47
B	0.95	1.35
C	5.00	-
D	0.55	0.65
E	0.06	0.10

FIGURE 2 - PHYSICAL DIMENSIONS (CONTINUED)

FIGURE 2(e) – Variants 05, 12, 19, 26, 33, 40, 47

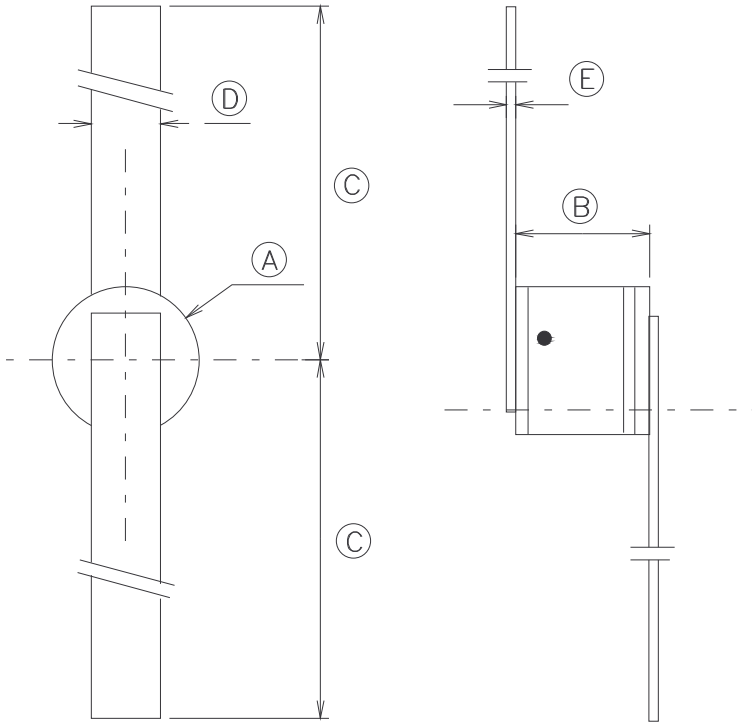

SYMBOL	MILLIMETERS	
	MIN.	MAX.
A	∅1.07	∅1.47
B	0.95	1.35
C	5.00	-
D	0.55	0.65
E	0.06	0.10

FIGURE 2(f) – Variants 06, 13, 20, 27, 34, 41, 48

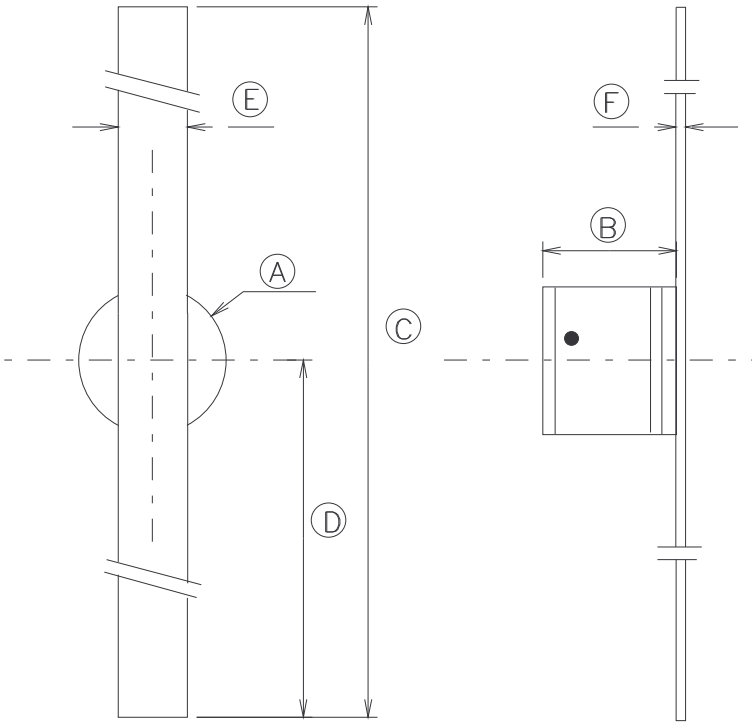

SYMBOL	MILLIMETERS	
	MIN.	MAX.
A	∅ 1.07	∅ 1.47
B	0.95	1.35
C	10.00	10.40
D	5.00	-
E	0.55	0.65
F	0.06	0.10

FIGURE 2 - PHYSICAL DIMENSIONS (CONTINUED)

FIGURE 2(g) – Variants 07, 14, 21, 28, 35, 42, 49

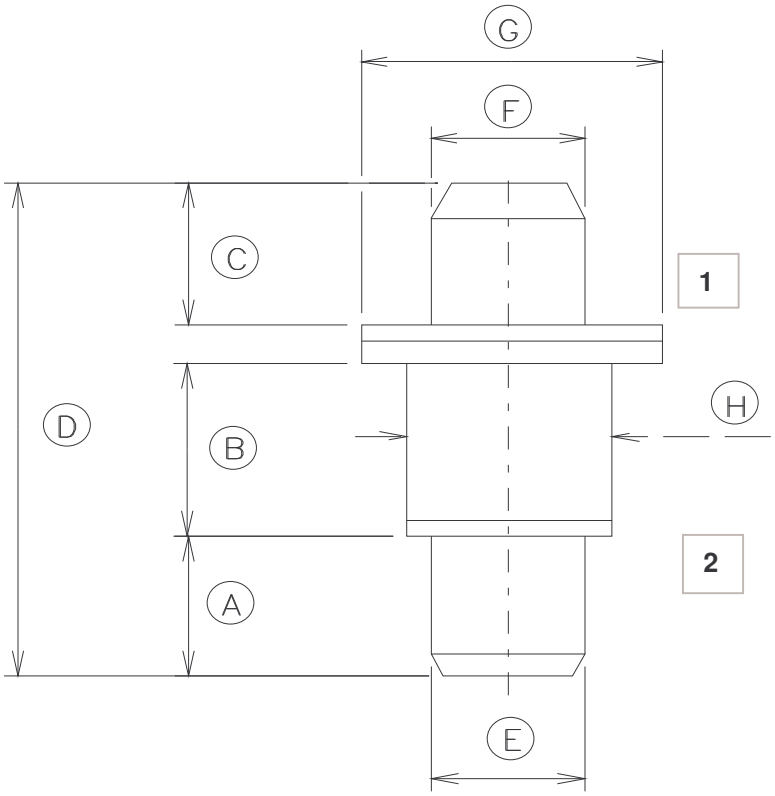

SYMBOL	MILLIMETERS	
	MIN.	MAX.
A	1.52	1.63
B	1.75	1.85
C	1.52	1.63
D	5.20	5.72
E	∅ 1.52	∅ 1.63
F	∅ 1.52	∅ 1.63
G	∅ 3.00	∅ 3.23
H	∅ 1.95	∅ 2.11

FIGURE 2 - PHYSICAL DIMENSIONS (CONTINUED)

FIGURE 2(h) – Variants 50 to 56

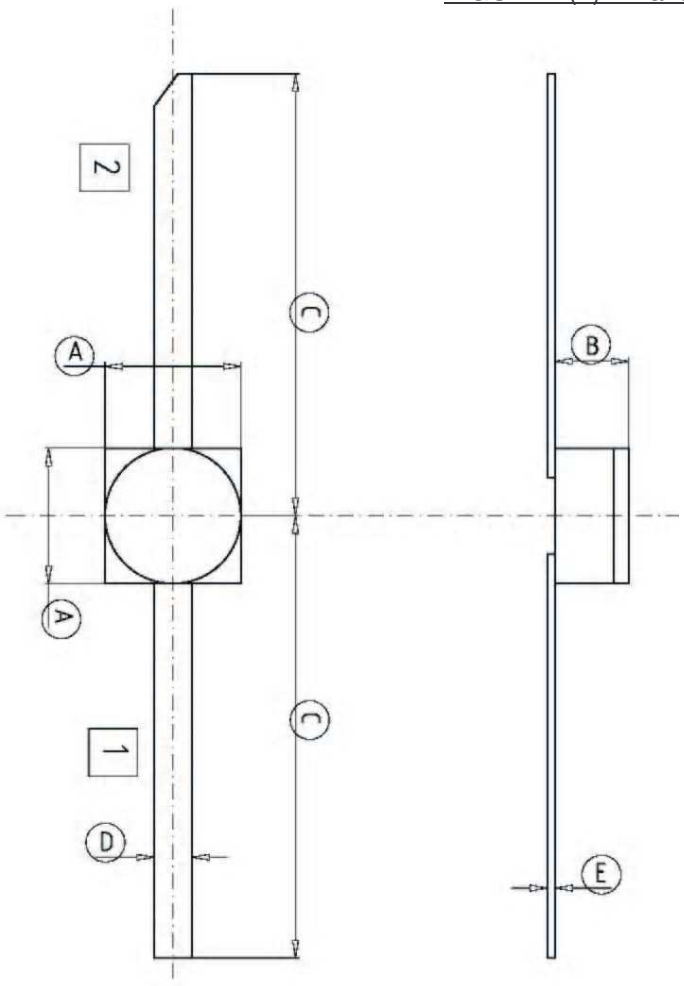

SYMBOL	MILLIMETERS	
	MIN.	MAX.
A	1.68	1.88
B	0.91	1.01
C	6.15	6.55
D	0.45	0.55
E	0.08	0.12

FIGURE 3 - FUNCTIONAL DIAGRAM



1 : Anode
2 : Cathode

NOTES

1. For variants 01 to 06, 08 to 13, 15 to 20, 22 to 27, 29 to 34, 36 to 41 and 43 to 48: The cathode end shall be marked with a black dot. The marking will not be on the cathode connection but adjacent to it as shown in Figures 2(a) to 2(f).
2. For variants 07, 14, 21, 28, 35, 42 and 49 terminal identification shall be by means of the physical configuration of the package as shown in Figure 2(g).
3. For variants 50 to 56 the cathode end shall be indicated by a 45° chamfer to the lead end as shown in Figure 2(h).

4. REQUIREMENTS

4.1 General

The complete requirements for procurement of the diodes specified herein shall be as stated in this specification and ESCC Generic Specification No. 5010 for Discrete Microwave Semiconductor Components. Deviations from the Generic Specification applicable to this specification only, are listed in Para. 4.2.

Deviations from the applicable Generic Specification and this Detail Specification, formally agreed with specific Manufacturers on the basis that the alternative requirements are equivalent to the ESCC requirements and do not affect the components' reliability, are listed in the appendices attached to this specification.

4.2 Deviations from generic specification

4.2.1 Deviations from Special In-process Controls

(a) Para. 5.2, Wafer Lot Acceptance : S.E.M. inspection shall be performed on 3 dice, after die separation.
(b) Para. 5.3, Wafer Screening (Chart II(a)) : Minority Carrier Lifetime shall be performed as an on-wafer measurement on a sample of 27 dice per wafer.

4.2.2 Deviations from Final Production Tests (Chart II(b))

(a) Para. 6.3, Pre-burn-in : Shall be performed in accordance with Para. 9.21(a) using the conditions specified in Table 5(a) of this specification for a duration of 48 hours minimum.
(b) Para 9.2.2, Die Shear : Individual forces need not be recorded and the minimum residual die area shall be ≥ 50% of the original die size.

4.2.3 Deviations from Burn-in and Electrical Measurements (Chart III(a))

(a) Para. 9.21, High Temperature Reverse Bias Burn-in : Shall be performed at 75% of rated V_R.

4.2.4 Deviations from Qualification Tests (Chart IV)

(a) Para. 9.2.4, Die-Shear : Individual forces need not be recorded and the minimum residual die area shall be ≥ 50% of the original die size.
(b) Para. 9.14, Vibration Test : Shall not be performed.
(c) Para. 9.15, Constant Acceleration : Shall not be performed.
(d) Para. 9.23, Special Testing : Shall not be performed.

4.2.5 Deviations from Lot Acceptance Tests (Chart V)

(a) Para. 9.14, Vibration : Shall not be performed.
(b) Para. 9.15, Constant Acceleration : Shall not be performed.
(c) Para. 9.23, Special Testing : Shall not be performed.

4.3 Mechanical and environmental requirements

4.3.1 Dimension Check

The dimensions of the diodes specified herein shall be checked. They shall conform to those shown in Figure 2.

4.3.2 Weight

The maximum weight of the diodes specified herein shall be as follows :
- Variants 01 to 06, 08 to 13, 15 to 20, 22 to 27, 29 to 34, 36 to 41, 43 to 48 and 50 to 56 : 0.02g.
- Variants 07, 14, 21, 28, 35, 42 and 49 : 0.15g

4.3.3 Terminal Strength

The requirements for terminal strength are specified in Section 9 of ESCC Generic Specification No. 5010. The test conditions shall be as follows :

(a) Condition : 'A' (tension).

Variants 01, 03 to 06, 08, 10 to 13, 15, 17 to 20, 22, 24 to 27, 29, 31 to 34, 36, 38 to 41, 43, 45 to 48 and 50 to 56:

- Force : 1.25 N
- Duration : 10 seconds

4.3.4 Bond Strength

The requirements for bond strength are specified in Section 9 of ESCC Generic Specification No. 5010. The test conditions shall be as follows :

(a) Condition : 'A' (tension).
(b) Separating Force : 0.03N minimum.

4.3.5 Die Shear

The requirements for die shear are specified in Section 9 of ESCC Generic Specification No. 5010. The test conditions shall be as follows :

(a) Semiconductor material remaining : 50% minimum.

4.3.6 High Temperature Stabilisation Bake

The requirements for high temperature stabilisation bake are specified in Section 9 of ESCC Generic Specification No. 5010. The temperature to be applied shall be + 175 (+0 –3)°C.

4.4 Materials and finishes

The materials and finishes shall be as specified herein. Where a definite material is not specified, a material which will enable the diodes specified herein to meet the performance requirements of this specification shall be used. Acceptance or approval of any constituent material shall not guarantee acceptance of the finished product.

4.4.1 Case

The case shall be hermetically sealed and have a ceramic body. The lid shall be welded or preform soldered.

4.4.2 Lead Materials and Finish

(a) For variants 01, 03 to 06, 08,10 to 13, 15, 17 to 20, 22, 24 to 27, 29, 31 to 34, 36, 38 to 41, 43 and 45 to 48, the body and lid material shall be Type 'D' with Type '7' finish and the lead material shall be Type 'E' with Type '2' finish in accordance with the requirements of ESCC Basic Specification No 23500.
(b) For variants 02, 09, 16, 23, 30, 37 and 44, the body and lid material shall be Type 'D' with Type '7' finish in accordance with the requirements of ESCC Basic Specification No 23500.
(c) For variants 07, 14, 21, 28, 35, 42 and 49, the body material shall be Type 'A' with Type '7' finish and the lid material shall be Type 'D' with Type '7' finish in accordance with the requirements of ESCC Basic Specification No 23500.
(d) For variants 50 to 56, the lead material shall be Type 'D' with Type '7' finish in accordance with the requirements of ESCC Basic Specification No 23500.

4.5 Marking

4.5.1 General

The marking of components delivered to this specification shall be in accordance with the requirements of ESCC Basic Specification No. 21700 and the following paragraphs. When the component is too small to accommodate all of the marking specified, as much as space permits shall be marked and the marking information, in full, shall accompany the component in its primary package.

The information to be marked and the order of precedence, shall be as follows :
(a) Cathode Identification.
(b) The ESCC Component Number.
(c) Traceability Information.

4.5.2 Cathode Identification

Cathode Identification shall be as shown in Figures 2 and 3 of this specification.

4.5.3 The ESCC Component Number

Each component shall bear the ESCC Component Number which shall be constituted and marked as follows:

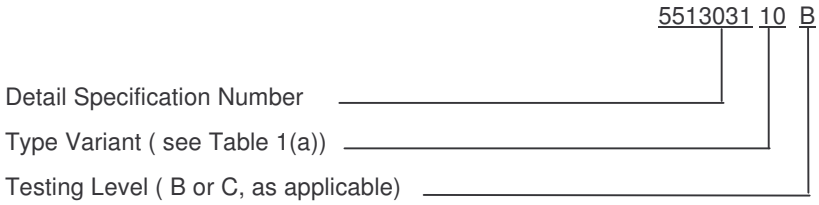

4.5.4 Traceability Information

Each component shall be marked in respect of traceability information as defined in ESCC Basic Specification No. 21700.

4.6 Electrical measurements

4.6.1 Electrical Measurements at Room Temperature

The parameters to be measured at room temperature are scheduled in Table 2. Unless otherwise specified, the measurements shall be performed at T_{amb} = + 22 ± 3°C.

4.6.2 Electrical Measurements at High and Low Temperatures

The parameters to be measured at high and low temperatures are scheduled in Table 3. Unless otherwise specified, the measurements shall be performed at + 150 °C (+0-3)°C.

4.6.3 Circuits for Electrical Measurements

Circuits for use in performed electrical measurements listed in Table 2 of this specification are shown in Figure 4.

4.7 Burn-in tests

Burn-in shall be Category 2 of Chart III (a) of Generic Specification N° 5010.

4.7.1 Parameters Drift Values

The parameter drift values applicable to burn-in are specified in Table 4 of this specification. Unless otherwise stated, the measurements shall be performed at T_{amb} = + 22 ± 3°C. The parameters drift values (Δ) applicable to the scheduled parameters shall not be exceeded. In addition to these drift value requirements for a given parameter, the appropriate limit value specified in Table 2 shall not be exceeded.

4.7.2 Conditions for High Temperature Reverse Bias Burn-in

The requirements for the High Temperature Reverse Bias Burn-in are specified in Section 7 of ESCC Generic Specification No. 5010. The conditions for High Temperature Reverse Bias Burn-in shall be as specified in Table 5(a) of this specification.

4.7.3 Conditions for Power Burn-in

The requirements of Power Burn-in are specified in Section 7 of ESCC Generic Specification No. 5010. The conditions for Power Burn-in shall be as specified in Table 5(b) of this specification.

4.7.4 Electrical Circuits for High Temperature Reverse Bias and Power Burn-in

Circuits for use in performing the High Temperature Reverse Bias Burn-in test are shown in Figures 5(a) and 5(b) of this specification.

TABLE 2(a) - ELECTRICAL MEASUREMENTS AT ROOM TEMPERATURE - DC PARAMETERS

No.	CHARACTERISTICS	SYMBOL	MIL-STD-750 TEST METHOD	TEST CONDITIONS	LIMITS		UNIT
					MIN.	MAX	
1	Reverse Current 1	I_{R1}	4016	V_R = - 150V	-	10	µA
2	Reverse Current 2	I_{R2}	4016	V_R = - 75V	-	500	nA
3	Forward Voltage	V_F	4011	I_F = 100 mA	-	1.1	V
4	Thermal Resistance	$R_{TH(J-C)}$	3101 Variants 01 to 06, 08 to 13, 15 to 20, 22 to 27 and 50 to 56. Variants 29 to 34, 36 to 41, 43 to 48, 07, 14, 21 and 28. Variant 35, 42 and 49.	Note 1 Power = 0.25 W Power = 0.50 W Power = 1.00 W	-	Note 2	°C/W

NOTES
1. Pulsed measurement, pulse width = 10ms.
2. See Item 4 of Table 1(b).

TABLE 2(b) - ELECTRICAL MEASUREMENTS AT ROOM TEMPERATURE - AC PARAMETERS

No.	CHARACTERISTICS	SYMBOL	TEST FIG.	MIL-STD-750 TEST METHOD	TEST CONDITIONS	LIMITS		UNIT
						MIN.	MAX	
5	Total Capacitance	C_T	-	4001	V_R = -50V f = 1 MHz	-	Note 1	pF
6	Forward Series Resistance	R_{SF}	-	4056	I_F = 10 mA f_0 = 120 MHz	-	Note 2	Ω
7	Minority Carrier Lifetime Note 3	τ_L	4(a)	-	I_F = 10 mA I_R = 6 mA	Note 4	-	ns

NOTES
1. See column 4 of Table 1(a). Junction capacitance = Total capacitance – Case capacitance.
   Typical case capacitance for cases in Figures 2(a) to 2(f) = 0.12 pF.
   Typical case capacitance for cases in Figure 2(g) = 0.18 pF.
   Typical case capacitance for cases in Figure 2(h) = 0.13 pF.
2. See column 5 of Table 1(a).
3. Only during Wafer Screening on a sample of 27 dice per wafer.
4. See Column 6 Table 1(a).

TABLE 3 - ELECTRICAL MEASUREMENTS AT HIGH AND LOW TEMPERATURES

No.	CHARACTERISTICS	SYMBOL	MIL-STD-750 TEST METHOD	TEST CONDITIONS	LIMITS		UNIT
					MIN.	MAX	
2	Reverse Current 2	I_{R2}	4016	V_R = -75V	-	50	µA

TABLE 4 - PARAMETER DRIFT VALUES

No.	CHARACTERISTICS	SYMBOL	SPEC. AND/OR TEST METHOD	TEST CONDITIONS	CHANGE LIMITS (Δ)	UNIT
2	Reverse Current 2	I_{R2}	As per Table 2	As per Table 2	± 50 (1) or (2) ± 100 (1)	nA %
3	Forward Voltage	V_F			± 5 (1)	%
5	Total Capacitance	C_T			± 5 (1) (3)	%

NOTES

1. Δ1 = Δ2 = Δ3.
2. Whichever is the greater, referred to the initial measurement.
3. Rounded upwards to the nearest 0.01 pF value. If C_T < 0.25 pF then Δ = ± 10%.

FIGURE 4 - CIRCUITS FOR ELECTRICAL MEASUREMENTS

FIGURE 4(a) - CIRCUIT FOR MESUREMENT OF MINORITY CARRIER LIFETIME

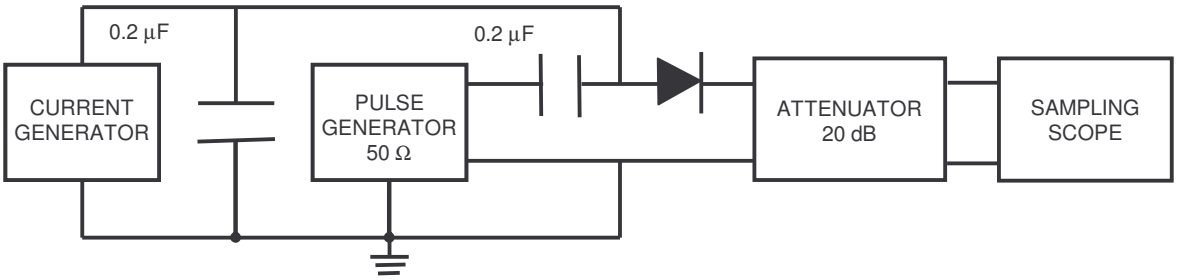

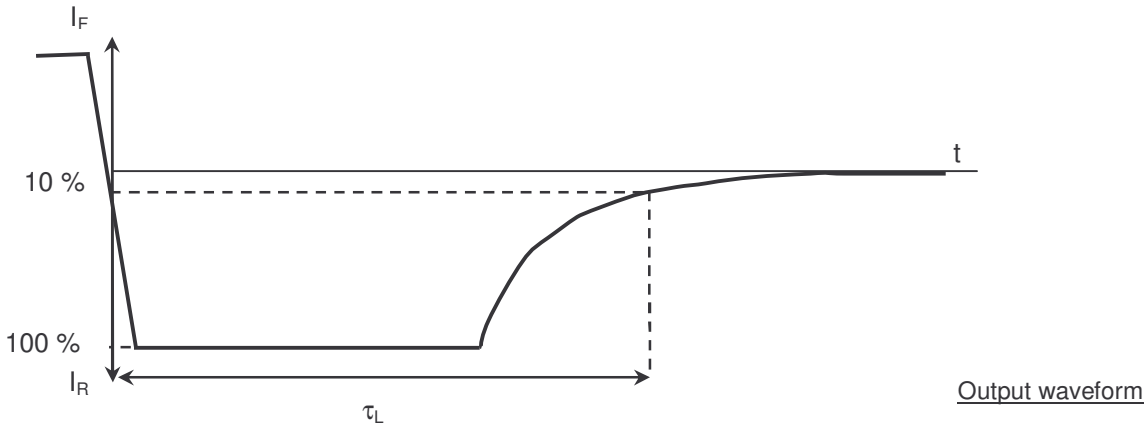

Output waveform

TABLE 5(a) - CONDITIONS FOR HIGH TEMPERATURE REVERSE BIAS BURN-IN

No	CHARACTERISTICS	SYMBOL	CONDITIONS	UNIT
1	Ambient Temperature	T_{amb}	+ 150 (-0 +3)	℃
2	Reverse Voltage	V_R	-112.5	V
3	Duration	t	Note 1	Hours

NOTES

1. See ESCC Generic Specification No. 5010.

TABLE 5(b) - CONDITIONS FOR POWER BURN-IN AND OPERATING LIFE TESTS

No	CHARACTERISTICS	SYMBOL	CONDITIONS	UNIT
1	Ambient Temperature	T_{amb}	+ 125 (-0 +3)	℃
2	Forward Current	I_F	Variants 50 to 56 : 30 Variants 01 to 06, 08 to 13, 15 to 20, 22 to 27 : 50 Variants 29 to 34, 36 to 41, 43 to 48 : 60 Variant 07, 14, 21 and 28 : 80 Variant 35, 42 and 49 : 100	mA
3	Duration of Power Burn-In	t	Note 1	Hours
4	Duration of Operating Life Tests	t	Note 1	Hours

NOTES

1. See ESCC Generic Specification No. 5010.

FIGURE 5(a) - ELECTRICAL CIRCUIT FOR HIGH TEMPERATURE REVERSE BIAS BURN-IN

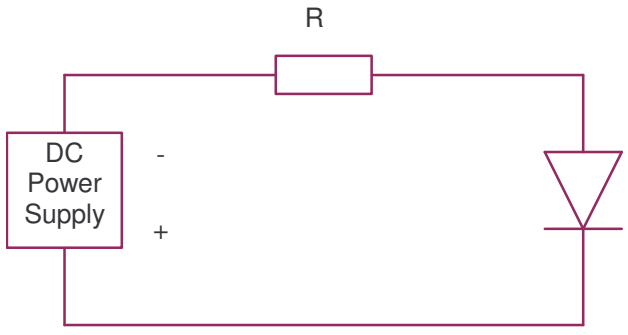

NOTES

1 : At the end of the HTRB, T_{amb} shall be decreased to room temperature and the reverse bias shall remain applied until $T_{amb} < +35$℃.

FIGURE 5(b) - ELECTRICAL CIRCUIT FOR POWER BURN-IN AND OPERATING LIFE TESTS

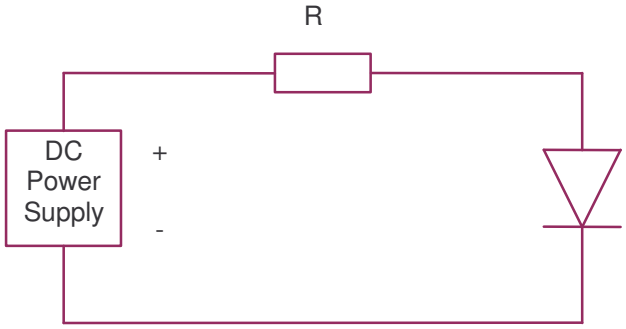

4.8 Environmental and endurance tests (Charts IV And V of ESCC Generic Specification No. 5010)

4.8.1 Electrical Measurements on Completion of Environmental Tests

The parameters to be measured on completion of environmental tests are scheduled in Table 2. Unless otherwise stated, the measurements shall be performed at T_{amb} = +22 ± 3°C.

4.8.2 Electrical Measurements at Intermediate Points and on Completion of Endurance Tests

The parameters to be measured at intermediate points and on completion of endurance tests are scheduled in Table 6. Unless otherwise stated, the measurements shall be performed at T_{amb} = +22 ± 3°C.

4.8.3 Conditions for Operating Life Tests (Part of Endurance Testing)

The requirements for operating life testing are specified in Section 9 of ESCC Generic Specification No. 5010. The conditions for operating life testing are specified in Table 5(b) of this specification.

4.8.4 Electrical Circuits for Operating Life Tests

The circuit to be used for performance of the operating life test shall be the same as shown in Figure 5(b) for Power Burn-in.

4.9 Total Dose Irradiation Testing

Not applicable.

4.10 Special testing

Not applicable.

TABLE 6 - ELECTRICAL MEASUREMENTS AT INTERMEDIATE POINTS AND ON COMPLETION OF ENDURANCE TESTING

No.	CHARACTERISTICS	SYMBOL	SPEC. AND/OR TEST METHOD	TEST CONDITIONS	LIMITS		UNIT
					MIN.	MAX.	
1	Reverse Current 1	I_{R1}	As per Table 2	As per Table 2	As per Table 2		µA
2	Reverse current 2	I_{R2}	As per Table 2	As per Table 2	As per Table 2		nA
3	Forward Voltage	V_F	As per Table 2	As per Table 2	As per Table 2		V
5	Total Capacitance	C_T	As per Table 2	As per Table 2	As per Table 2		pF

FIGURE 6 – BIAS CONDITIONS FOR IRRADATION TESTING

Not applicable

TABLE 7 – ELECTRICAL MEASUREMENTS DURING AND ON COMPLETION OF IRRADATION TESTING

Not applicable

APPENDIX 'A'

AGREED DEVIATIONS FOR CHELTON TELECOM & MICROWAVE (F)

ITEMS AFFECTED	DESCRIPTION OF DEVIATIONS
Para. 4.2.2	Para. 9.12, Radiographic Inspection of Chart III(a) : May be performed after Para. 9.7, Particle Impact Noise Detection (PIND) test, in X and Z axes only.
Para. 4.2.3	Para. 9.12, Radiographic Inspection : May be performed after Para. 9.7, PIND test of Chart II(b).