# DOCUMENT CHANGE REQUEST

| | | | |
|---|---|---|---|
| DCR number 203 | Changes required for: General | Originator: S Thacker |
| Date: 2005/10/06 | Date sent: 2005/10/06 | Organisation: ESA/ESTEC |
| Status: IMPLEMENTED | | |

| | | | |
|---|---|---|---|
| Title: | Transistors Low Power NPN, based on type 2N2484 | | |
| Number: | 5201/001 | Issue: | 2 |

Other documents affected:

Page:

Page 8 & 9 Figures 2(a) & 2(b) , Physical Dimensions for TO-18 & CCP packages

plus several Minor editorial changes to be in addition to those summarised in DCR154 (& DCR187)already submitted

Paragraph:

Page 8 & 9 Figures 2(a) & 2(b) , Physical Dimensions for TO-18 & CCP packages

plus several Minor editorial changes to be in addition to those summarised in DCR154 (& DCR187)already submitted

Original wording:

Proposed wording:

See attached mark-up issue 3 draft B for full details including all editorial changes for this DCR (mark-up also incorporates changes to 5201/001 issue 2 per DCR154 & DCR187).

Figure 2
Figure 2(a) for TO-18 package amended :
Dim "e", "e1", "a" are "BSC" (instead of "TYPICAL")
Note about terminal identification added
Note "applies to all leads" added to Dim "b", "b2", "L"

Figure 2(b) for CCP) package amended :
Note about terminal identification added

Justification:

Editorial amendments are included for consistency and clarification purposes.

Figure 2 is amended for the purposes of consistency with the generic specification, clarification of the technical requirements (BSC = "Basic Spacing between Centres", whereas "TYPICAL" is unspecified) and completeness.

| |
|---|
| Attachments: |
| 5201001_Mark-up_for_DCR.pdf, null |
| Modifications: |
| N/A |
| Approval signature: |
|  |
| Date signed: |
| 2005-10-06 |

MARK-up 21/7/05
Included 4/8/05.
DCR 154 30/9/5.
" 187
DCR TBD

European Space Components Coordination

Pages 1 to 15

# TRANSISTORS, LOW POWER, NPN

## BASED ON TYPE 2N2484

## ESCC Detail Specification No. 5201/001

| | |
|---|---|
| Issue 3 - Draft B | September. |
| Issue 3 - Draft A | January 2005 |

Document Custodian: European Space Agency - see https://escies.org

## LEGAL DISCLAIMER AND COPYRIGHT

European Space Agency, Copyright © 2005. All rights reserved.

The European Space Agency disclaims any liability or responsibility, to any person or entity, with respect to any loss or damage caused, or alleged to be caused, directly or indirectly by the use and application of this ESCC publication.

This publication, without the prior permission of the European Space Agency and provided that it is not used for a commercial purpose, may be:

- copied in whole, in any medium, without alteration or modification.
- copied in part, in any medium, provided that the ESCC document identification, comprising the ESCC symbol, document number and document issue, is removed.

## DOCUMENTATION CHANGE NOTICE

(Refer to https://escies.org for ESCC DCR content)

| DCR No. | CHANGE DESCRIPTION |
|---|---|
| TBD | Specification up issued to incorporate editorial and technical changes per DCR. |

154, 187, TBD

## TABLE OF CONTENTS


| | | |
|---|---|---|
| **1.** | **GENERAL** | **5** |
| 1.1 | Scope | 5 |
| 1.2 | Applicable Documents | 5 |
| 1.3 | Terms, Definitions, Abbreviations, Symbols and Units | 5 |
| 1.4 | The ESCC Component Number and Component Type Variants | 5 |
| 1.4.1 | The ESCC Component Number | 5 |
| 1.4.2 | Component Type Variants | 5 |
| 1.5 | Maximum Ratings | 5 |
| 1.6 | Physical Dimensions and Terminal Identification | 7 |
| 1.6.1 | Metal Can Package (TO-18) - 3 lead | 7 |
| 1.6.2 | Chip Carrier Package (CCP) - 3 terminal | 8 |
| 1.7 | Functional Diagram | 9 |
| 1.8 | Materials and Finishes | 9 |
| **2.** | **REQUIREMENTS** | **9** |
| 2.1 | General | 9 |
| 2.1.1 | Deviations from the Generic Specification | 9 |
| 2.2 | Marking | 9 |
| 2.3 | Terminal Strength | 10 |
| 2.4 | Electrical Measurements at Room, High and Low Temperatures | 10 |
| 2.4.1 | Room Temperature Electrical Measurements | 10 |
| 2.4.2 | High and Low Temperatures Electrical Measurements | 12 |
| 2.5 | Parameter Drift Values | 13 |
| 2.6 | Intermediate and End-Point Electrical Measurements | 13 |
| 2.7 | Power Burn-in Conditions | 14 |
| 2.8 | Operating Life Conditions | 14 |
| APPENDIX 'A' | | 15 |

## 1. GENERAL

### 1.1 SCOPE

This specification details the ratings, physical and electrical characteristics and test and inspection data for the component type variants and/or the range of components specified below. It supplements the requirements of, and shall be read in conjunction with, the ESCC Generic Specification listed under Applicable Documents.

### 1.2 APPLICABLE DOCUMENTS

The following documents form part of this specification and shall be read in conjunction with it:

(a) ESCC Generic Specification No. 5000
(b) MIL-STD-750, Test Methods and Procedures for Semiconductor Devices

### 1.3 TERMS, DEFINITIONS, ABBREVIATIONS, SYMBOLS AND UNITS

For the purpose of this specification, the terms, definitions, abbreviations, symbols and units specified in ESCC Basic Specification No. 21300 shall apply.

### 1.4 THE ESCC COMPONENT NUMBER AND COMPONENT TYPE VARIANTS

#### 1.4.1 The ESCC Component Number

The ESCC Component Number shall be constituted as follows:

Example: 520100101

- Detail Specification Reference: 5201001
- Component Type Variant Number: 01 (as required)

#### 1.4.2 Component Type Variants

The component type variants applicable to this specification are as follows:

| Variant Number | Based on Type | Case | Lead/Terminal Material and/or Finish | Weight max g |
|---|---|---|---|---|
| 01 | 2N2484 | TO-18 | D2 | 0.4 |
| 02 | 2N2484 | TO-18 | D3 or D4 | 0.4 |
| 04 | 2N2484 | CCP | 2 | 0.06 |
| 05 | 2N2484 | CCP | 4 | 0.06 |

The lead/terminal material and/or finish shall be in accordance with the requirements of ESCC Basic Specification No. 23500.

### 1.5 MAXIMUM RATINGS

The maximum ratings shall not be exceeded at any time during use or storage.

Maximum ratings shall only be exceeded during testing to the extent specified in this specification and when stipulated in Test Methods and Procedures of the ESCC Generic Specification.

| Characteristics | Symbols | Maximum Ratings | Unit | Remarks |
|---|---|---|---|---|
| Collector-Base Voltage | $V_{CBO}$ | 60 | V | Over entire operating temperature range |
| Collector-Emitter Voltage | $V_{CEO}$ | 60 | V | |
| Emitter-Base Voltage | $V_{EBO}$ | 6 | V | |
| Collector Current (Continuous) | $I_C$ | 50 | mA | Continuous |
| Power Dissipation For TO-18 and CCP | $P_{tot1}$ | 0.36 | W | At $T_{amb} \leq +25°C$ Note 1 |
| For CCP | $P_{tot2}$ | 0.73 (Note 2) | W | |
| For TO-18 | $P_{tot3}$ | 1.2 | W | At $T_{case} \leq +25°C$ Note 1 |
| Operating Temperature Range | $T_{op}$ | -65 to +200 | °C | Note 3 |
| Storage Temperature Range | $T_{stg}$ | -65 to + 200 | °C | Note 3 |
| Soldering Temperature For TO-18 For CCP | $T_{sol}$ | +260 +245 | °C | Note 4 Note 5 |

**NOTES:**

1. For $T_{amb}$ or $T_{case}$ > +25°C, derate linearly to 0W at +200°C.
2. When mounted on a 15 x 15 x 0.6mm ceramic substrate.
3. For Variants with tin-lead plating or hot solder dip lead finish all testing performed at $T_{amb}$ > +125°C shall be carried out in a 100% inert atmosphere.
4. Duration 10 seconds maximum at a distance of not less than 1.5mm from the device body and the same lead shall not be resoldered until 3 minutes have elapsed.
5. Duration 5 seconds maximum and the same terminal shall not be resoldered until 3 minutes have elapsed.

## 1.6 PHYSICAL DIMENSIONS AND TERMINAL IDENTIFICATION

### 1.6.1 Metal Can Package (TO-18) - 3 lead

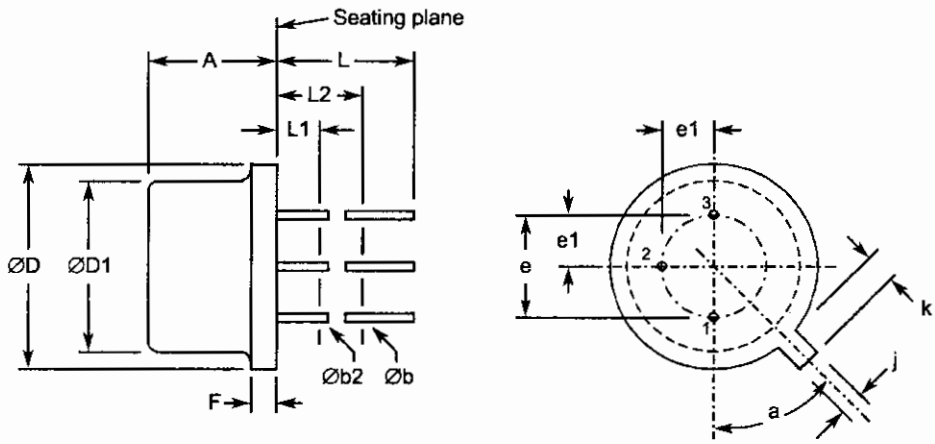


| Symbols | Dimensions mm | | Notes |
|---|---|---|---|
| | Min | Max | |
| A | 4.32 | 5.33 | |
| Øb | 0.406 | 0.533 | ~~1~~ 2, 3 |
| Øb2 | 0.406 | 0.483 | ~~1~~ 2, 3 |
| ØD | 5.31 | 5.84 | |
| ØD1 | 4.52 | 4.95 | |
| e | 2.54 ~~TYPICAL~~ | | ~~2~~ 4 |
| e1 | 1.27 ~~TYPICAL~~ BSC | | ~~2~~ 4 |
| F | - | 0.762 | |
| j | 0.914 | 1.17 | |
| k | 0.711 | 1.22 | ~~3~~ 5 |
| L | 12.7 | - | ~~1~~ 2 |
| L1 | - | 1.27 | ~~1~~ 3 |
| L2 | 6.35 | - | ~~1~~ 3 |
| a | 45° ~~TYPICAL~~ 45° BSC | | ~~1~~ 1, 4, 6 |

'0' make bigger

**NOTES:**

1 → 3 ~~1.~~ ~~[illegible]~~ Øb2 applies between L1 and L2. Øb applies between L2 and 12.7mm from the seating plane. Diameter is uncontrolled within L1 and beyond 12.7mm from the seating plane.

2 → 4 ~~2.~~ Leads having maximum diameter 0.483mm measured in the gauging plane 1.37(+0.025,-0)mm below the seating plane of the device shall be within 0.178mm of their true position relative to a

1 Terminal identification is specified by reference to the tab position where lead 1 = emitter, lead 2 = base, lead 3 = collector.

2. Applies to all leads.

maximum-width-tab.

5, ~~4.~~ Measured from the maximum diameter of the actual device.

6, ~~5.~~ Tab centreline.

1.6.2 Chip Carrier Package (CCP) - 3 terminal

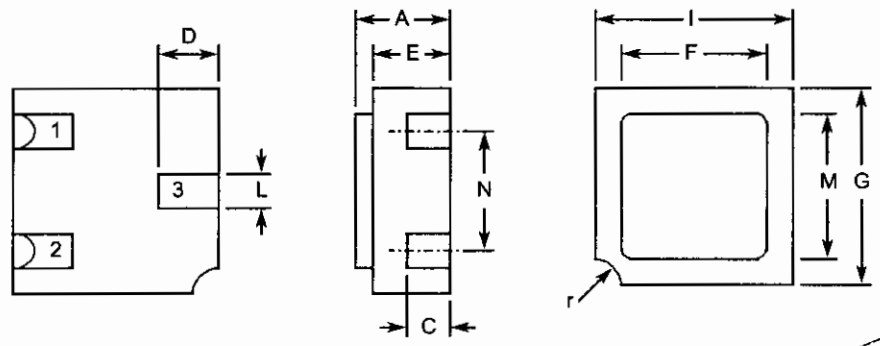


| Symbols | Dimensions mm | | Notes |
|---|---|---|---|
| | Min | Max | |
| A | 1.15 | 1.5 | |
| C | 0.45 | 0.56 | 2 |
| D | 0.6 | 0.91 | 2 |
| E | 0.91 | 1.12 | |
| F | 1.9 | 2.15 | |
| G | 2.9 | 3.25 | |
| I | 2.4 | 2.85 | |
| L | 0.4 | 0.6 | 2 |
| M | 2.4 | 2.65 | |
| N | 1.8 | 2 | |
| r | 0.3 TYPICAL | | 1 |

**NOTES:**

2 ~~The three terminals have the same dimensions~~.

Applies to all terminals

1 Terminal identification is specified by reference to the corner notch position where terminal 1 = emitter, terminal 2 = base, terminal 3 = collector.

1.7 FUNCTIONAL DIAGRAM

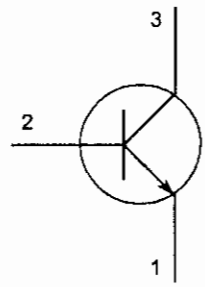


1. Emitter.
2. Base.
3. Collector.

**NOTES:**
1. For TO-18, the collector is internally connected to the case.
2. For CCP, the lid is not connected to any terminal.

(DCR187)

1.8 MATERIALS AND FINISHES
Materials and finishes shall be as follows:

a) Case
For the metal can package the case shall be hermetically sealed and have a metal body with hard glass seals.

For the chip carrier package the case shall be hermetically sealed and have a ceramic body with a Kovar lid.

b) Leads/Terminals
As specified in Component Type Variants.

## 2. REQUIREMENTS

2.1 GENERAL
The complete requirements for procurement of the components specified herein are as stated in this specification and the ESCC Generic Specification. Permitted deviations from the Generic Specification, applicable to this specification only, are listed below.

Permitted deviations from the Generic Specification and this Detail Specification, formally agreed with specific Manufacturers on the basis that the alternative requirements are equivalent to the ESCC requirement and do not affect the component's reliability, are listed in the appendices attached to this specification.

2.1.1 Deviations from the Generic Specification

(a) Deviation from Screening Tests - Chart F3
High Temperature Reverse Bias Burn-in and the subsequent Final Measurements for HTRB shall be omitted.

2.2 MARKING
The marking shall be in accordance with the requirements of ESCC Basic Specification No. 21700 and

as follows.

The information to be marked on the component shall be:

~~(a) Terminal identification.~~
(a) ~~(b)~~ The ESCC qualified components symbol (for ESCC qualified components only).
(b) ~~(c)~~ The ESCC Component Number.
(c) ~~(d)~~ Traceability information.

2.3 TERMINAL STRENGTH

The test conditions for terminal strength, tested as specified in the ESCC Generic Specification, shall be as follows:

For TO-18, Test Condition: E, lead fatigue.

2.4 ELECTRICAL MEASUREMENTS AT ROOM, HIGH AND LOW TEMPERATURES

Electrical measurements shall be performed at room, high and low temperatures.

2.4.1 Room Temperature Electrical Measurements

The measurements shall be performed at $T_{amb}$=+22 ±3°C.

| Characteristics | Symbols | MIL-STD-750 Test Method | Test Conditions | Limits | | Units |
|---|---|---|---|---|---|---|
| | | | | Min | Max | |
| Collector-Base Breakdown Voltage | $V_{(BR)CBO}$ | 3001 | $I_C$ = 10µA, Bias condition D | 60 | - | V |
| Collector-Emitter Breakdown Voltage | $V_{(BR)CEO}$ | 3011 | $I_C$ = 10mA, Bias condition D, Note 1 | 60 | - | V |
| Emitter-Base Breakdown Voltage | $V_{(BR)EBO}$ | 3026 | $I_E$ = 10µA, Bias condition D | 6 | - | V |
| Collector-Base Cut-off Current | $I_{CBO}$ | 3036 | $V_{CB}$ = 45V, Bias condition D | - | 10 | nA |
| Emitter-Base Cut-off Current | $I_{EBO}$ | 3061 | $V_{EB}$ = 5V, Bias condition D | - | 10 | nA |
| Collector-Emitter Saturation Voltage | $V_{CE(SAT)}$ sat | 3071 | $I_C$=1mA<br>$I_B$=0.1mA<br>Note 1 | - | 350 | mV |
| Forward Current Transfer Ratio | $h_{FE1}$ | 3076 | $V_{CE}$=5V ; $I_C$ = 1µA | 30 | - | - |
| | $h_{FE2}$ | 3076 | $V_{CE}$=5V ; $I_C$ = 10µA | 100 | 500 | - |
| | $h_{FE3}$ | 3076 | $V_{CE}$=5V ; $I_C$ = 100µA | 175 | 550 | - |
| | $h_{FE4}$ | 3076 | $V_{CE}$=5V ; $I_C$ = 1mA | 250 | 650 | - |
| | $h_{FE5}$ | 3076 | $V_{CE}$=5V ; $I_C$ = 10mA<br>Note 1 | - | 800 | - |
| High Frequency Small Signal Current Gain | $h_{fe1}$ | 3306 | $V_{CE}$=5V,<br>$I_C$=50µA<br>f=5MHz<br>Note 2 | 3 | - | - |
| | $h_{fe2}$ | 3306 | $V_{CE}$=5V,<br>$I_C$=500µA<br>f=30MHz<br>Note 2 | 2 | - | - |
| Small Signal Current Gain | $h_{fe3}$ | 3206 | $V_{CE}$=5V,<br>$I_C$=1mA<br>f=1kHz<br>Note 2 | 150 | 900 | - |
| Output Capacitance | $C_{obo}$ | 3236 | $V_{CB}$=5V,<br>$I_E$=0A<br>f=1MHz<br>Note 2 | - | 6 | pF |
| Input Capacitance | $C_{ibo}$ | 3240 | $V_{EB}$=500mV<br>$I_C$=0A<br>f=1MHz<br>Note 2 | - | 6 | pF |

| Characteristics | Symbols | MIL-STD-750 Test Method | Test Conditions | Limits | | Units |
|---|---|---|---|---|---|---|
| | | | | Min | Max | |
| Small Signal Input Impedance | $h_{ie}$ | 3201 | $V_{CE}$=5V,<br>$I_C$=1mA<br>f=1kHz<br>Note 2 | 3.5 | 24 | kΩ |
| Small Signal Output Admittance | $h_{oe}$ | 3216 | $V_{CE}$=5V,<br>$I_C$=1mA<br>f=1kHz<br>Note 2 | - | 40 | µmho |
| Small Signal Reverse Voltage Transfer Ratio | $h_{re}$ | 3211 | $V_{CE}$=5V,<br>$I_C$=1mA<br>f=1kHz<br>Note 2 | - | $8x10^{-4}$ | - |
| Wide-Band Noise Figure | $NF_W$ | 3246 | f=10Hz to 10kHz<br>$V_{CE}$=5V,<br>$I_C$=10µA<br>$R_S$=10kΩ<br>Note 2 | - | 3 | dB |
| Spot Noise Figure | <br><br><br><br>NF1<br>NF2<br>NF3 | 3246 | $V_{CE}$=5V,<br>$I_C$=10µA<br>$R_S$=10kΩ<br>BW=f ±10%<br>f=100Hz<br>f=1kHz<br>f=10kHz<br>Note 2 | <br><br><br><br>-<br>-<br>- | <br><br><br><br>10<br>3<br>2 | dB |

**NOTES:**

1. Pulse measurement: Pulse Width ≤ 300µs, Duty Cycle ≤ 1%
2. For AC characteristics read and record measurements shall be performed on a sample of 32 components with 0 failures allowed. Alternatively a 100% inspection may be performed.

2.4.2 High and Low Temperatures Electrical Measurements

| Characteristics | Symbols | MIL-STD-883 Test Method | Test Conditions Note 1 | Limits | | Units |
|---|---|---|---|---|---|---|
| | | | | Min | Max | |
| Collector-Base Cut-off Current | $I_{CBO}$ | 3036 | $T_{amb}$=+150(+0-5)°C<br>$V_{CB}$=45V, Bias Condition D | - | 10 | µA |
| Forward Current Transfer Ratio 2 | $h_{FE2}$ | 3076 | $T_{amb}$=-55(+5-0)°C<br>$V_{CE}$=5V<br>$I_C$=10µA | 20 | - | - |

**NOTES:**

1. Read and record measurements shall be performed on a sample of 5 components with 0 failures allowed. Alternatively a 100% inspection may be performed.

2.5 PARAMETER DRIFT VALUES

Unless otherwise specified, the measurements shall be performed at $T_{amb}$=+22 ±3°C.

The test methods and test conditions shall be as per the corresponding test defined in Room Temperature Electrical Measurements.

The drift values (Δ) shall not be exceeded for each characteristic specified. The corresponding absolute limit values for each characteristic shall not be exceeded.

| Characteristics | Symbols | Limits | | | Units |
|---|---|---|---|---|---|
| | | Drift Value Δ | Absolute | | |
| | | | Min | Max | |
| Collector-Base Cut-off Current | $I_{CBO}$ | ±5 or (1) ±100% | - | 10 | nA |
| Collector-Emitter Saturation Voltage | $V_{CE(SAT)}$ | ±30 or (1) ±15% | - | 350 | mV |
| Forward-Current Transfer Ratio 4 | $h_{FE4}$ | ±15% | 250 | 650 | - |

**NOTES:**

1. Whichever is the greater referred to the initial value.

2.6 INTERMEDIATE AND END-POINT ELECTRICAL MEASUREMENTS

Unless otherwise specified, the measurements shall be performed at $T_{amb}$=+22 ±3°C.

The test methods and test conditions shall be as per the corresponding test defined in Room Temperature Electrical Measurements .

The limit values for each characteristic shall not be exceeded.

| Characteristics | Symbols | Limits | | Units |
|---|---|---|---|---|
| | | Min | Max | |
| Collector-Base Cut-off Current | $I_{CBO}$ | - | 10 | nA |
| Collector-Emitter Saturation Voltage | $V_{CE(SAT)}$ | - | 350 | mV |
| Forward-Current Transfer Ratio 4 | $h_{FE4}$ | 250 | 650 | - |

2.7 POWER BURN-IN CONDITIONS

| Characteristics | Symbols | Limits | Units |
|---|---|---|---|
| Ambient Temperature | $T_{amb}$ | +20 to +50 | °C |
| Power Dissipation | $P_{tot}$ | As per Maximum Ratings<br>$P_{tot}$ derated at the chosen $T_{amb}$ | W |
| Collector-Base Voltage | $V_{CB}$ | 27 | V |

2.8 OPERATING LIFE CONDITIONS

The conditions shall be as specified for Power Burn-in.

## APPENDIX 'A'

AGREED DEVIATIONS FOR STMICROELECTRONICS (F)

<table>
<tr><th>ITEMS AFFECTED</th><th>DESCRIPTION OF DEVIATIONS</th></tr>
<tr><td>Deviations from Production Control-Chart F2</td><td>Special In-process Control Internal Visual Inspection.<br>For CCP packages the criteria specified for voids in the fillet and minimum die mounting material around the visible die perimeter for die mounting defects may be omitted providing that a radiographic inspection to verify the die-attach process is performed on a sample basis in accordance with STMicroelectronics procedure 0076637.</td></tr>
<tr><td>Deviations from Room Temperature Electrical Measurements</td><td>All AC characteristics (Room Temperature Electrical Measurement Note 2) may be considered guaranteed but not tested if successful pilot lot testing has been performed on the wafer lot which includes AC characteristic measurements per the Detail Specification.<br><br>A summary of the pilot lot testing shall be provided if required by the Purchase Order.<br><br>Characteristics $h_{fe1}$, and $C_{ibo}$, shall be as follows:
<table>
<tr><th rowspan="2">Characteristics</th><th rowspan="2">Symbols</th><th rowspan="2">MIL-STD-750 Test Method</th><th rowspan="2">Test Conditions</th><th colspan="2">Limits</th><th rowspan="2">Units</th></tr>
<tr><th>Min.</th><th>Max.</th></tr>
<tr><td>High Frequency Small Signal Current Gain 1</td><td>$h_{fe1}$</td><td>3306</td><td>$V_{CE}$=5V<br>$I_C$=50µA<br>f=5MHz<br>Note 2</td><td>1</td><td>-</td><td>-</td></tr>
<tr><td>Input Capacitance</td><td>$C_{ibo}$</td><td>3240</td><td>$V_{EB}$=500mV<br>$I_C$=0A<br>f=1MHz<br>Note 2</td><td>-</td><td>15</td><td>pF</td></tr>
</table></td></tr>
<tr><td>Deviations from High and Low Temperatures Electrical Measurements</td><td>All characteristics specified may be considered guaranteed but not tested if successful pilot lot testing has been performed on the wafer lot which includes characteristic measurements at high and low temperatures per the Detail Specification.<br>A summary of the pilot lot testing shall be provided if required by the Purchase Order.</td></tr>
</table>