DOCUMENT CHANGE REQUEST

DCR number 232	Changes required for: General	Originator: S. Thacker
Date: 2006/01/31	Date sent: 2006/01/31	Organisation: ESA/ESTEC
Status: IMPLEMENTED		

Title:	Resistors Heaters Flexible Single and Double Layer, Follow-up Specification for ESA/SCC Detail		
Number:	4009/002	Issue:	3

Other documents affected:

Page:

See attached mark-up for details (most pages include one or more editorial changes)

Paragraph:

See attached mark-up for details (most pages include one or more editorial changes)

Original wording:

Proposed wording:

See attached mark-up for details of all changes.

This DCR includes minor editorial amendments only as detailed in the attached mark-up.

Amendments include:
- Clarification & correction of content (wording/symbols/terminology/Table Headings).
- Capitalisation of specific terms.
- Format changes to be consistent with this specification plus other ESCC Detail specs.

Justification:

Editorial changes are for clarification and consistency purposes.

Attachments:
Markup_for_DCR_4009002.pdf, null
Modifications:
N/A
Approval signature:

Date signed:
2006-01-31

MARK-UP detailing changes for DCR.
S. Thacker
26/1/2006

ESCC
European Space Components Coordination

Pages 1 to 14

RESISTORS, HEATERS, FLEXIBLE

SINGLE AND DOUBLE LAYER

ESCC Detail Specification No. 4009/002

Issue ~~3~~ 4	~~February 2005~~ January 2006

esa

Document Custodian: European Space Agency - see https://escies.org

LEGAL DISCLAIMER AND COPYRIGHT

2006
European Space Agency, Copyright © 2005. All rights reserved.

The European Space Agency disclaims any liability or responsibility, to any person or entity, with respect to any loss or damage caused, or alleged to be caused, directly or indirectly by the use and application of this ESCC publication.

This publication, without the prior permission of the European Space Agency and provided that it is not used for a commercial purpose, may be:

- copied in whole, in any medium, without alteration or modification.
- copied in part, in any medium, provided that the ESCC document identification, comprising the ESCC symbol, document number and document issue, is removed.

DOCUMENTATION CHANGE NOTICE

(Refer to https://escies.org for ESCC DCR content)

DCR No.	CHANGE DESCRIPTION
~~117~~	Specification up issued to incorporate editorial and technical and policy changes per DCR.

TABLE OF CONTENTS

1.	**GENERAL**	**5**
1.1	Scope	5
1.2	Applicable Documents	5
1.3	Terms, Definitions, Abbreviations, Symbols and Units	5
1.4	The ESCC Component Number and Component Type Variants	5
1.4.1	The ESCC Component Number	5
1.4.2	Component Type Variants and Range of Components	5
1.4.3	Manufacturer Specific Heater Identification	7
1.5	Maximum Ratings	7
1.6	Physical Dimensions and Heater Outline	8
1.7	Material and Finishes	9
1.7.1	Heater Element	9
1.7.2	Protective Coating	9
1.7.3	Terminal Leads	9
2.	**REQUIREMENTS**	**9**
2.1	General	9
2.1.1	Deviations from the Generic Specification	10
2.1.1.1	Deviations from Screening Tests- Chart F3	10
2.2	Marking	10
2.3	Robustness of Terminations	10
2.4	Electrical Measurements at Room, High and Low Temperatures	10
2.4.1	Room Temperature Electrical Measurements	10
2.4.2	High and Low Temperatures Electrical Measurements	11
2.5	Intermediate and End-Point Electrical Measurements	11
2.6	Burn-In Conditions	13
2.7	Operating Life Conditions	13
APPENDIX 'A'		14

1. GENERAL

1.1 SCOPE

This specification details the ratings, physical and electrical characteristics and test and inspection data for the component type variants and/or the range of components specified below. It supplements the requirements of, and shall be read in conjunction with, the ESCC Generic Specification listed under Applicable Documents.

1.2 APPLICABLE DOCUMENTS

The following documents form part of this specification and shall be read in conjunction with it:

(a) ESCC Generic Specification No. 4009.
(b) MIL-P-46112: Military Specification for Polyimide Plastic Sheet and Strip.
(c) ASTM-D5213: Standard Specification for Polymeric Resin Film for Electrical Insulation and Dielectric Applications.

1.3 TERMS, DEFINITIONS, ABBREVIATIONS, SYMBOLS AND UNITS

For the purpose of this specification, the terms, definitions, abbreviations, symbols and units specified in ESCC Basic Specification No. 21300 shall apply.

1.4 THE ESCC COMPONENT NUMBER AND COMPONENT TYPE VARIANTS

1.4.1 The ESCC Component Number

The ESCC Component Number shall be constituted as follows:

Example: 400900201A1234

- Detail Specification Reference: 4009002
- Component Type Variant Number: 01 (as required)
- Manufacturer Specific Heater Identification: A1234 (as applicable) where
  A: First letter of the applicable Manufacturer's name
  1234: A unique 4 digit number, sequentially allocated by the applicable Manufacturer to a specific Heater design.

h

1.4.2 Component Type Variants and Range of Components

The component type variants and range of components applicable to this specification are as follows:

Variant (Note 1)	Terminal Leads AWG	Terminal Leads Configuration (Note 2)	Resistance Range (Ω)	Tolerance ~~Min/Max~~ (±%)	Heating Area (cm^2)	Resistance Density (Ω/cm^2)	Temperature Coefficient ($10^{-6}/°C$)	Weight Max (g)
01, 25	20	Straight	1 to 5000	2, 3, 5, 10	1.6 to 1300	0.1 to 200	175	Note 3
02, 26	22	Straight	1 to 5000	2, 3, 5, 10	1.6 to 1300	0.1 to 200	175	Note 3
03, 27	24	Straight	1 to 5000	2, 3, 5, 10	1.6 to 1300	0.1 to 200	175	Note 3
04, 28	26	Straight	1 to 5000	2, 3, 5, 10	1.6 to 1300	0.1 to 200	175	Note 3
05, 29	28	Straight	1 to 5000	2, 3, 5, 10	1.6 to 1300	0.1 to 200	175	Note 3
06, 30	30	Straight	1 to 5000	2, 3, 5, 10	1.6 to 1300	0.1 to 200	175	Note 3
07, 31	20	UTP	1 to 5000	2, 3, 5, 10	1.6 to 1300	0.1 to 200	175	Note 3
08, 32	22	UTP	1 to 5000	2, 3, 5, 10	1.6 to 1300	0.1 to 200	175	Note 3
09, 33	24	UTP	1 to 5000	2, 3, 5, 10	1.6 to 1300	0.1 to 200	175	Note 3
10, 34	26	UTP	1 to 5000	2, 3, 5, 10	1.6 to 1300	0.1 to 200	175	Note 3
11, 35	28	UTP	1 to 5000	2, 3, 5, 10	1.6 to 1300	0.1 to 200	175	Note 3
12, 36	30	UTP	1 to 5000	2, 3, 5, 10	1.6 to 1300	0.1 to 200	175	Note 3
13, 37	20	JTP	1 to 5000	2, 3, 5, 10	1.6 to 1300	0.1 to 200	175	Note 3
14, 38	22	JTP	1 to 5000	2, 3, 5, 10	1.6 to 1300	0.1 to 200	175	Note 3
15, 39	24	JTP	1 to 5000	2, 3, 5, 10	1.6 to 1300	0.1 to 200	175	Note 3
16, 40	26	JTP	1 to 5000	2, 3, 5, 10	1.6 to 1300	0.1 to 200	175	Note 3
17, 41	28	JTP	1 to 5000	2, 3, 5, 10	1.6 to 1300	0.1 to 200	175	Note 3
18, 42	30	JTP	1 to 5000	2, 3, 5, 10	1.6 to 1300	0.1 to 200	175	Note 3
19, 43	20	STP	1 to 5000	2, 3, 5, 10	1.6 to 1300	0.1 to 200	175	Note 3
20, 44	22	STP	1 to 5000	2, 3, 5, 10	1.6 to 1300	0.1 to 200	175	Note 3
21, 45	24	STP	1 to 5000	2, 3, 5, 10	1.6 to 1300	0.1 to 200	175	Note 3
22, 46	26	STP	1 to 5000	2, 3, 5, 10	1.6 to 1300	0.1 to 200	175	Note 3
23, 47	28	STP	1 to 5000	2, 3, 5, 10	1.6 to 1300	0.1 to 200	175	Note 3
24, 48	30	STP	1 to 5000	2, 3, 5, 10	1.6 to 1300	0.1 to 200	175	Note 3

NOTES:

1. Variants 01 to 24 are single layer heaters.
   Variants 25 to 48 are double layer heaters.
2. UTP = Unjacketed Twisted Pair, JTP = Jacketed Twisted Pair, STP = Shielded Twisted Pair.
3. The maximum weight of the heaters, excluding the weight of the terminal leads, shall be:
   Single layer heaters: $50mg/cm^2$
   Double layer heaters: $75mg/cm^2$

   The weight of the terminal leads shall be as specified in the applicable wire ESCC Detail Specification.

1.4.3 Manufacturer Specific Heater Identification

A heater design drawing shall be produced by the Manufacturer after negotiation with the Orderer and shall be held under configuration control by the Manufacturer who will allocate a unique Specific Heater Identification sequentially when a request for a heater is received.

Each heater design drawing shall include the following information: -

(a) The heater outline and dimensions as required by Physical Dimensions herein. This shall include details of the terminal leads configurations and the angle of exit of each lead with respect to the heater body.
(b) The ESCC Component Number for the heater, including the Manufacturer Specific Heater Identification.
(c) The terminal lead ESCC Detail Specification and Component Number.
(d) The heater electrical information as follows:
- Resistance value Rn and tolerance by circuit at T_{amb}= +22±3°C.
- Maximum rated power in still air at T_{amb}= +25°C.
(e) Track width and spacing with tolerances.
(f) Cover material (if fitted).
(g) Pressure sensitive tape (if fitted).
(h) Dimension of pre-form, if required.

1.5 MAXIMUM RATINGS

The maximum ratings shall not be exceeded at any time during use or storage.

Maximum ratings shall only be exceeded during testing to the extent specified in this specification and when stipulated in Test Methods and Procedures of the ESCC Generic Specification.

Characteristics	Symbols	Ratings Min.	Ratings Max.	Units	Remarks
Rated Power Density	Pn		0.54	W/cm^2	Note 1, 2 , 3, 4
Operating Temperature Range	T_{op}	-65	to +200	°C	T_{amb} Note 3
Storage Temperature Range	T_{stg}	-65	to +200	°C	-
Rated Voltage	U_R		$\sqrt{Pn.Rn.S}$	V	Note 2, 3, 5

NOTES:

1. With heater suspended in still air at T_{amb}= +25°C.
2. Actual rated power shall be specified in the applicable heater design drawing. It shall be determined from the specified Heating Area (S) in cm^2.
3. Rated Power Density shall be derated against temperature and Heating Area as follows: .
   (a) Pn = 0.54W/cm^2 for $T_{amb} \leq$ +25°C. Derate to 0W/cm^2 at 0.00308W/cm^2/°C for + 25 °C < $T_{amb} \leq$ +200°C.
   (b) Pn = 0.54W/cm^2 for 1.6cm^2 ≤ Heating Area (S) ≤ 300cm^2. Derate to 0.3W/cm^2 at

$0.00024W/cm^2/cm^2$ for $300cm^2$ < Heating Area ≤ $1300cm^2$.

4. The following design rule shall be applied:

$$\frac{\text{Area of Heater Resistive Element}}{\text{Heating Area}} = 50 \pm 10\%$$

5. Rn is the nominal resistance.

1.6 PHYSICAL DIMENSIONS AND HEATER OUTLINE

The general physical dimensions and heater layout shall be as follows. The physical dimensions and heater layout applicable to a specific heater will be specified in the heater design drawing held by the Manufacturer.

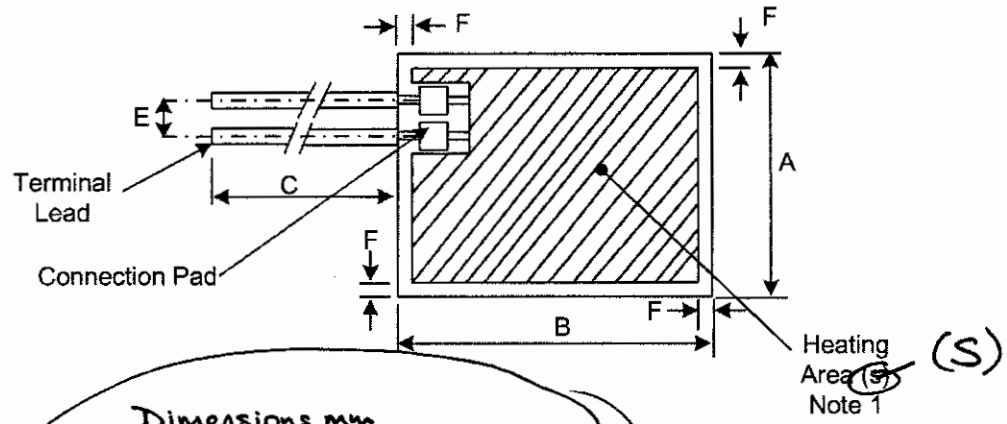

Dimensions mm

Symbol	Millimetres		Tolerance (± mm)	Remarks
	Min	Max		
A	6	590	0.5	Note 1
B	8	600	0.5	Note 1
C	300	-	Note 2	-
E	2	-	Note 3	Note 4
F	0.4	-	-	Note 5, 6
S	-	-	-	Note 1

NOTES:

1. The Heating Area, defined as the total area of the heater excluding the peripheral margin and the terminal connection area, shall have the following limits:

$1.6cm^2 \leq S \leq 1300cm^2$

The following design rule shall be applied:

$$\frac{\text{Area of Heater Resistive Element}}{\text{Heating Area (S)}} = 50 \pm 10\%$$

Heater thickness:
- 0.2mm maximum for single layer heater
- 0.3mm maximum for double layer heater

except over terminal connection area.

2. The tolerance shall be ± 10% on the required dimension.
3. The tolerance shall be ± 0.5mm on the required dimension.
4. Terminal lead spacing shall be measured at the terminal connection area. Terminal leads may exit the terminal connection area at any angle. The terminal leads may be located on any side of the heater. There may be more than 2 terminal leads (for multiple resistive element and double layer heaters).
5. Peripheral margin dimension of the finished product.
6. Perforated holes in the peripheral margin are allowed provided that the distance between the edge of hole and the heater element or connection pad is equal to, or greater than, dimension F.

1.7 MATERIAL AND FINISHES

1.7.1 Heater Element

The heater element shall be made of flexible nickel/chromium/iron alloy (76/16/8 Inconel).

1.7.2 Protective Coating

Heater resistive elements and terminal lead connections shall be completely coated with Polyimide Polymer/FEP in accordance with MIL-P-46112 (as superseded by ASTM-D5213).

1.7.3 Terminal Leads

Terminal leads shall be made of multi-strand silver-plated copper in accordance with ESCC Generic Specification No. 3901. The applicable heater design drawing shall specify the wire ESCC Detail Specification and the wire ESCC Component Number. The wire gauge shall be as specified in Component Type Variants and Range of Components herein. Terminal leads shall be electrically welded to the heater resistive element.

2. REQUIREMENTS

2.1 GENERAL

The complete requirements for procurement of the components specified herein are as stated in this specification and the ESCC Generic Specification. Permitted deviations from the Generic Specification, applicable to this specification only, are listed below.

Permitted deviations from the Generic Specification and this Detail Specification, formally agreed with specific Manufacturers on the basis that the alternative requirements are equivalent to the ESCC requirement and do not affect the component's reliability, are listed in the appendices attached to this specification.

2.1.1 Deviations from the Generic Specification

2.1.1.1 Deviations from Screening Tests- Chart F3

(a) For heaters where the specific heater drawing requires the application of cover material or pressure sensitive tape the following additional steps shall be performed during Screening Tests:
   (i) An additional 100% External Visual Inspection shall be performed after successful completion of High and Low Temperatures Electrical Measurements.
   (ii) After successful completion of the additional External Visual Inspection the cover material and/or pressure sensitive tape shall be applied.
   Note:
   For heaters which already have a backing foil applied the additional External Visual Inspection shall not be performed.

(b) For heaters where the specific heater drawing requires pre-forming this shall be performed on successful completion of Screening Tests. The pre-forming operation shall be performed at a temperature not exceeding the maximum storage temperature. An additional External Visual Inspection shall be performed after the pre-forming operation to check for any damage.

2.2 MARKING

The marking shall be in accordance with the requirements of ESCC Basic Specification No. 21700 and as follows.

The information to be marked on the component shall be:

(a) The ESCC qualified components symbol (for ESCC qualified components only).
(b) The ESCC Component Number.
(c) Traceability information.

2.3 ROBUSTNESS OF TERMINATIONS

The test conditions for robustness of terminations, tested as specified in the ESCC Generic Specification, shall be as follows and apply to a single terminal lead at a time.

Wire Gauge (AWG)	20	22	24	26	28	30
Pull Strength (N)	45	36	22	13	9	4.5
Duration (s) Minimum	5	5	5	5	5	5

2.4 ELECTRICAL MEASUREMENTS AT ROOM, HIGH AND LOW TEMPERATURES

The measurements shall be performed at room, high and low temperatures.

2.4.1 Room Temperature Electrical Measurements

The measurements shall be performed at T_{amb}=+22 ±3°C.

Characteristics	Symbols	Test Method and Conditions	Limits		Units
			Min	Max	
Resistance	R_A	ESCC No. 4009 ±2% Tolerance ±3% Tolerance ±5% Tolerance ±10% Tolerance	 0.98 Rn 0.97 Rn 0.95 Rn 0.9 Rn	 1.02 Rn 1.03 Rn 1.05 Rn 1.1 Rn	Ω
Insulation Resistance	R_I	ESCC No. 4009	1000	-	MΩ
Voltage Proof Leakage Current	I_L	ESCC No. 4009 Test Voltage = 500Vrms	-	2 or (1) 4	mA $\mu A/cm^2$

NOTES:

1. Whichever is greater based on the Heating Area (s) in cm^2.

2.4.2 High and Low Temperatures Electrical Measurements

$\Delta R_A/R_A(L)$

Characteristics	Symbols	Test Method and Conditions (Note 1)	Limits		Units
			Min	Max	
Resistance change between -65(+3 -0)°C and +22 ±3°C	ΔR/R	ESCC No. 4009	0	-1.57	%
Resistance change between +200(+0 -3)°C and +22 ±3°C	ΔR/R	ESCC No. 4009	0	+3.17	%

NOTES:

1. Measurements shall be performed during Screening Tests on a sample of 3 components. In the event of any failure a 100% inspection shall be performed.

$\Delta R_A/R_A(H)$

2.5 INTERMEDIATE AND END-POINT ELECTRICAL MEASUREMENTS

Unless otherwise specified, the measurements shall be performed at T_{amb}=+22 ±3°C.

The test methods and test conditions shall be as per the corresponding test defined in Room Temperature Electrical Measurements .

The drift values (Δ) shall not be exceeded for each characteristic where specified. The corresponding absolute limit values for each characteristic shall not be exceeded.

Test Reference per ESCC No. 4009	Characteristics	Symbols	Limits		Units
			Min.	Max.	
Intermediate Measurements (1000 hours)	Resistance	R_A			Ω
	±2% Tolerance		0.98 Rn	1.02 Rn	
	±3% Tolerance		0.97 Rn	1.03 Rn	
	±5% Tolerance		0.95 Rn	1.05 Rn	
	±10% Tolerance		0.9 Rn	1.1 Rn	
	Change in Resistance	$\Delta R_A/R_A$	-	±1.4	%
Final Measurements (2000 hours)	Resistance	R_A			Ω
	±2% Tolerance		0.98 Rn	1.02 Rn	
	±3% Tolerance		0.97 Rn	1.03 Rn	
	±5% Tolerance		0.95 Rn	1.05 Rn	
	±10% Tolerance		0.9 Rn	1.1 Rn	
	Change in Resistance (related to 0 hours)	$\Delta R_A/R_A$	-	±2	%
	Insulation Resistance	R_I	1000	-	MΩ
	Voltage Proof Leakage Current (Test Voltage: 500Vrms)	I_L	-	2 or (1) 4	mA $\mu A/cm^2$

NOTES:

1. Whichever is greater based on the Heating Area(s) in cm^2.

2.6 BURN-IN CONDITIONS

Characteristics	Symbols	Test Conditions	Units
Heater Temperature	T_{HTR}	+200 (Note 1)	°C
Power Density	Pn	0.54 (Note 1)	W/cm^2

NOTES:

1. Voltage shall be applied until either the specified heater temperature or the power density is reached.

2.7 OPERATING LIFE CONDITIONS

The conditions shall be as specified for Burn-in.