DOCUMENT CHANGE REQUEST

DCR number 281	Changes required for: General	Originator: Hans Lienert
Date: 2006/09/13	Date sent: 2006/09/13	Organisation: DLR
Status: IMPLEMENTED		

Title:	Cable,Spacewire, Round, quad using Symmetric Cables, Flexible, -200 to +180 deg.C		
Number:	3902/003	Issue:	1

Other documents affected:

Page:

Page 6 TABLE 1(a) TYPE VARIANTS
TABLE 1(b) MAXIMUM RATINGS
Page 7 FIGURE 1(b) MINIMUM SHIELDING EFFECTIVENESS (see added graph in e-mail)
Page 8 FIGURE 2(a) SINGLE SYMMETRIC CABLE
FIGURE 2(b) ROUND CABLE
Page 12 para. 4.4.1.2 Lay Length of

Paragraph:

Page 6 TABLE 1(a) TYPE VARIANTS
TABLE 1(b) MAXIMUM RATINGS
Page 7 FIGURE 1(b) MINIMUM SHIELDING EFFECTIVENESS (see added graph in e-mail)
Page 8 FIGURE 2(a) SINGLE SYMMETRIC CABLE
FIGURE 2(b) ROUND CABLE
Page 12 para. 4.4.1.2 Lay Length of

Original wording:

Proposed wording:

see attached file on separate e-mail
to Helga Hahnemann

Justification:

The additional type variant 02 provides the following features

AWG 26 conductor
Usable for higher datarates
Advantage for longer length (i.e. EGSE)
Even compatible to existent Micro-D/9 pin connector
Outer cable diameter 9,0 mm max.

Attachments:
Gore.pdf, DCR281attmarkup.pdf, null
Modifications:
As per amended mark up.
Approval signature:
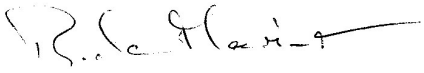
Date signed:
2006-09-13

TABLE 1(a) - TYPE VARIANTS

Variant	Z_0 (Ω)	AWG	Inner Conductor				Insul. Wire	Filler	Shield	
			No. of Strands x ⌀ (mm)	Max. ⌀ (mm)	Nom. Sect. (mm^2)	Max. d.c. Resist. (Ω/km)	Max. ⌀ (mm)	⌀ (mm)	Constr.	Strand ⌀ (mm)
01	100	28	7x0.126	0.39	0.089	256	1.2	1.0	BS	0.079
02	100	26	7x0.160	0.49	0.141	159	1.4	1.0	BS	0.079

Symmetric Cable Characteristics		Filler RC	Binder RC	Outer Shield		Round Cable Characteristics		Bend Radius
Max. ⌀ (mm)	Max. Weight (kg/km)	⌀ (mm)	Nom. ⌀ (mm)	Constr.	Strand ⌀ (mm)	Max. ⌀ (mm)	Max. Weight (kg/km)	Min. (mm)
2.7	12	1.0	0.004	BS	0.102	7.5	85	45
3.1	15	1.4	0.004	BS	0.102	9.0	100	60

TABLE 1(b) - MAXIMUM RATINGS

No.	Characteristics	Symbol	Maximum Ratings	Unit	Remarks
1	Operating Voltage (Continuous)	V_{op}	200	V_{rms}	-
2	Current	I	1.5 2.5	A	AWG 28 AWG 26
3	Operating Frequency	f_M	400 100	MHz Mbit/sec	10 metres. Assembly
4	Operating Temperature Range	T_{op}	−200 to +180	°C	T_{amb} Note 1
5	Storage Temperature Range	T_{stg}	−200 to +180	°C	-
6	Soldering Temperature	T_{sol}	+250	°C	Note 2

NOTES

1. Precautions shall be taken such that the aggregate temperature of the datalines (ambient plus rise), due to power dissipation, does not exceed the maximum operating temperature.
2. For 5 seconds maximum.

FIGURE 1 - PARAMETER DERATING INFORMATION

FIGURE 1(a) - ALLOWABLE CURRENT VERSUS TEMPERATURE

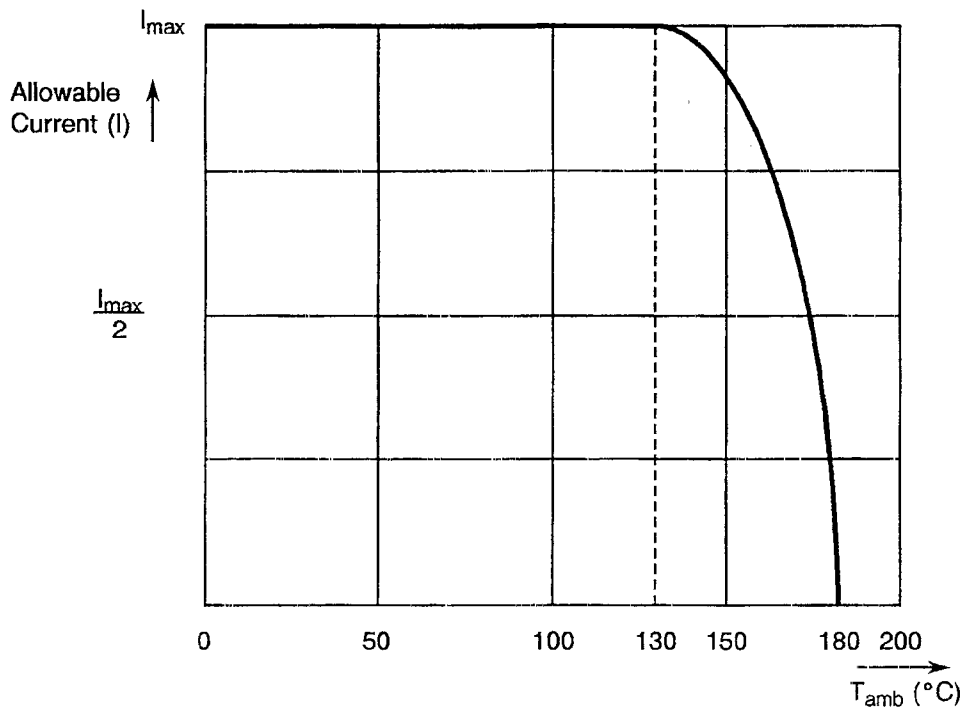

FIGURE 1(b) - MINIMUM SHIELDING EFFECTIVENESS

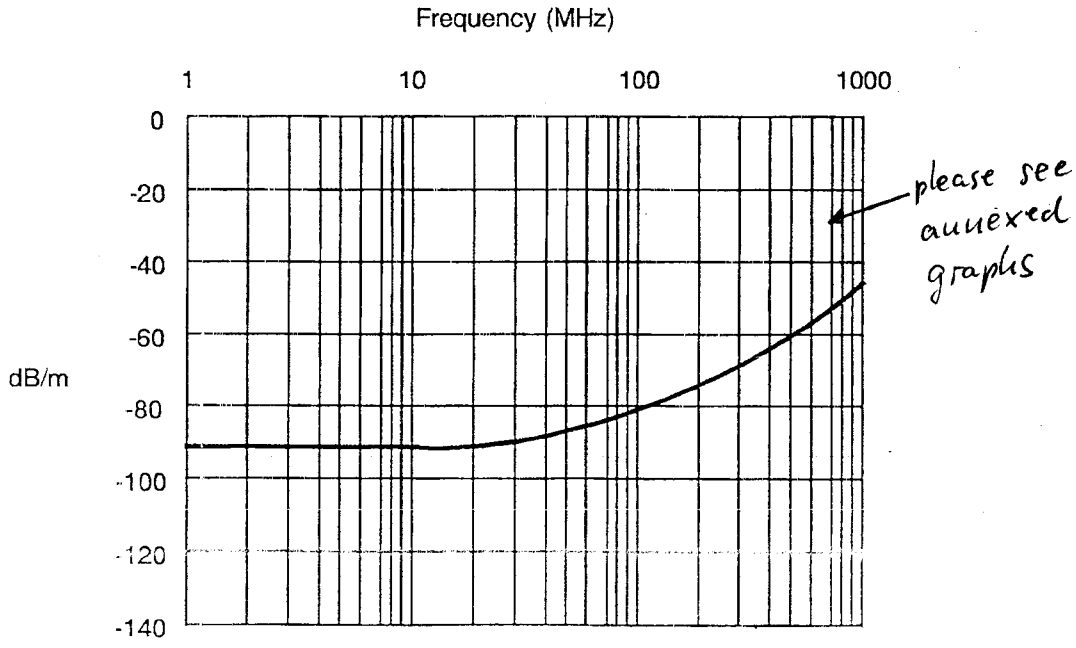

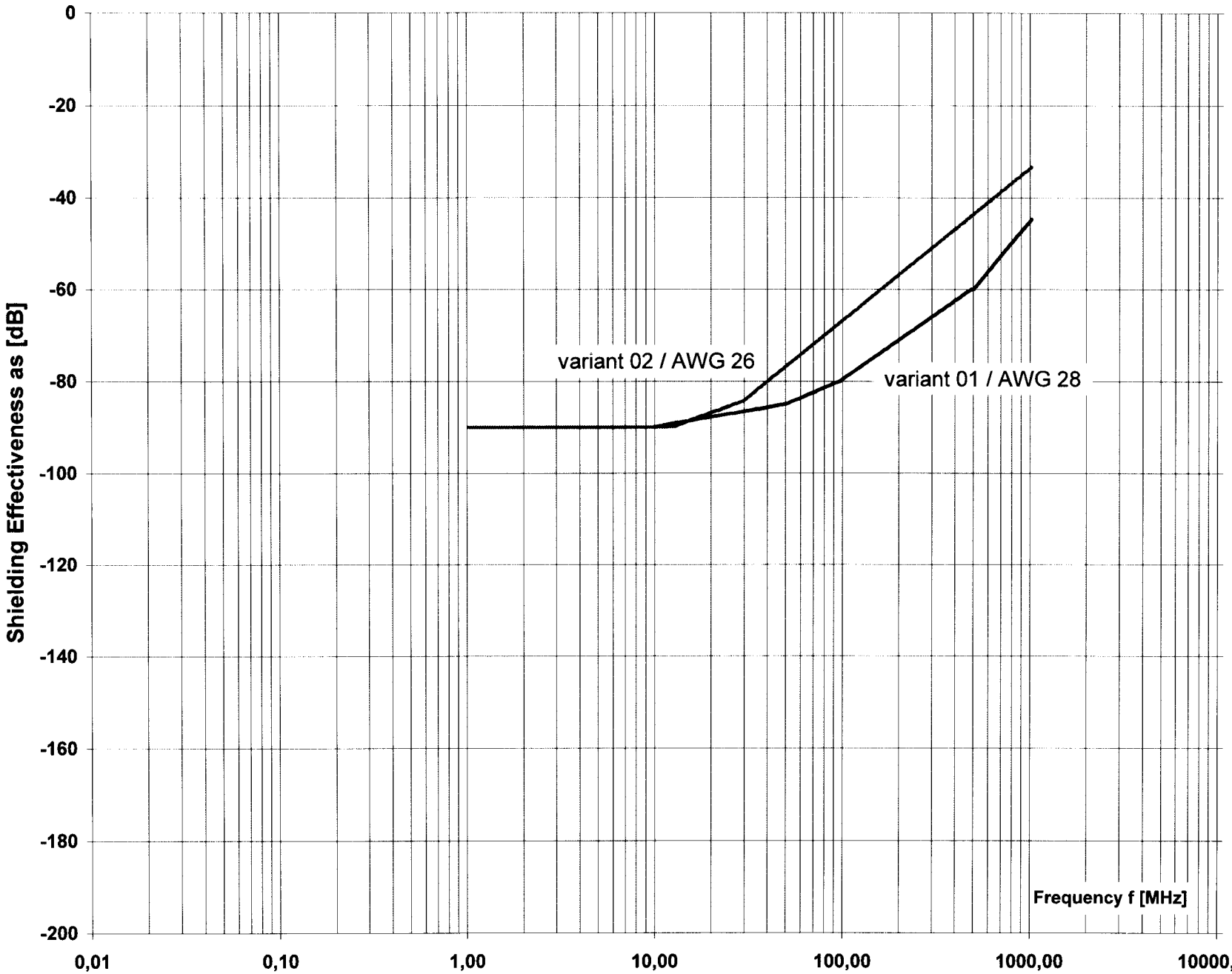

Paratron®

Paratron ist eingetragenes Warenzeichen
Der W.L. Gore & ASSOCIATES GmbH

Construction:

Lot no.:

06.09.2006

K. Opitz

Remark:

variant 01 / AWG 28
variant 02 / AWG 26

measured according to IEC 61196-1 EN 50289-1-6

W.L. Gore & Associates GmbH
Nordring 1
D-91785 Pleinfeld
Tel.(09144)601-0

GORE

FIGURE 2 - PHYSICAL CHARACTERISTICS

FIGURE 2(a) - SINGLE SYMMETRIC CABLE

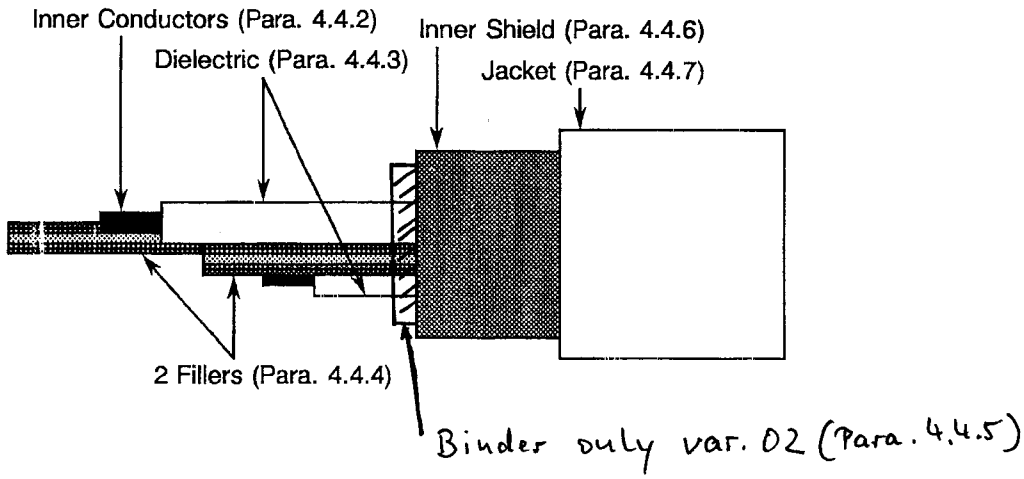

NOTES

1. See Table 1(a) for dimensions.

FIGURE 2(b) - ROUND CABLE

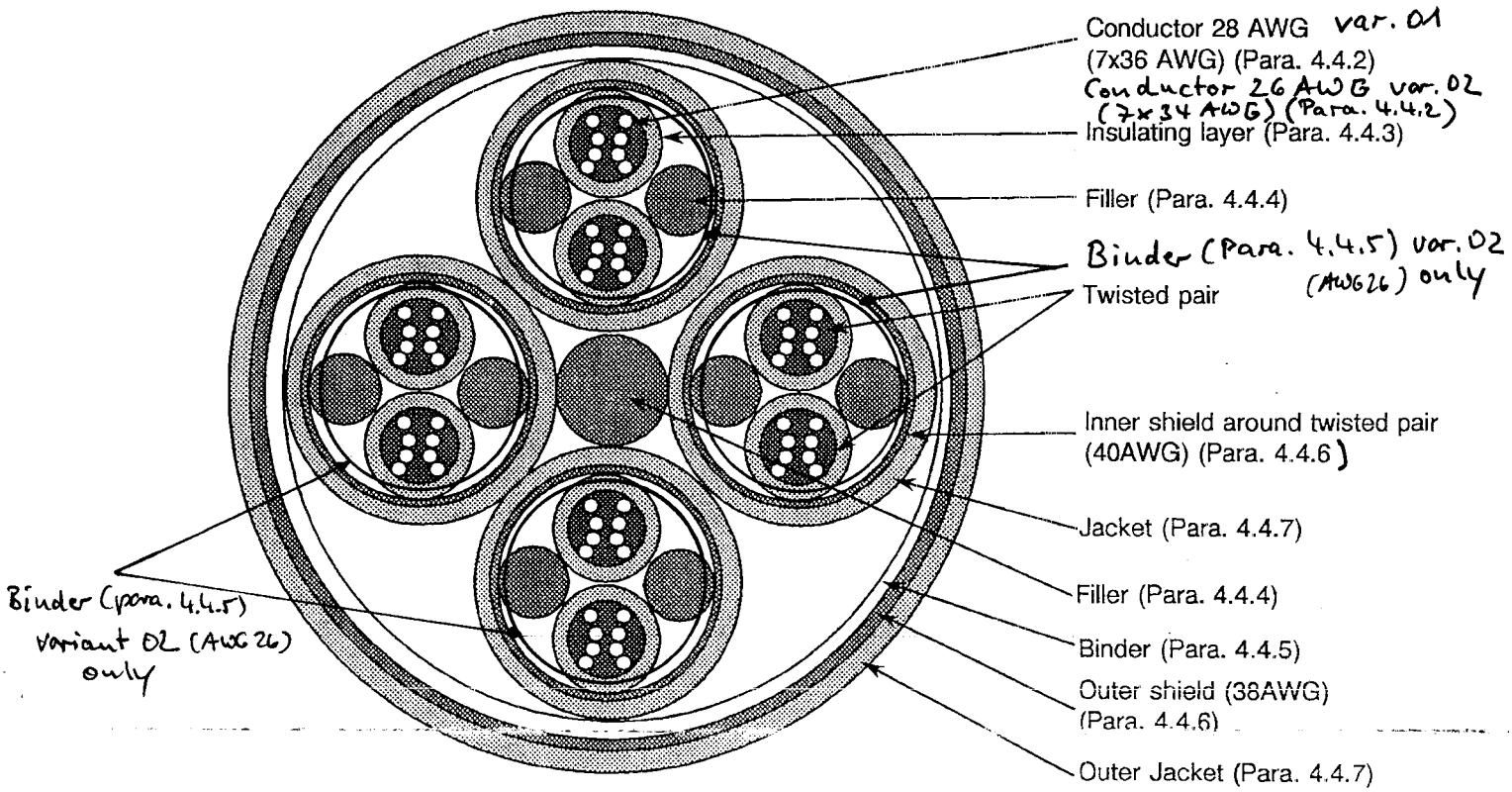

4.4.1.2 Lay Length of Symmetric Cables

The lay length of all symmetric cables twisted together shall not be less than 12 times and not more than 16 times the outside diameter of the unshielded and unjacketed cable. This requirement will lead to the following lay length and/or twist per metre respectively.

variant	Lay Length (mm)		Twists/Metre	
	Min.	Max.	Min.	Max.
01	24	32	32	41
02	27	35	29	37

4.4.1.3 Lay Length of the complete Cable

Four sets of symmetric cables twisted together shall not be less than 12 times and not more than 16 times the outside diameter of two symmetric cables. This construction shall be the core to be covered by a binder and a braided shield, i.e. outer conductor. This construction is then covered by an outermost jacket in accordance with Figure 2(b).

variant	Lay Length (mm)	
	Min.	Max.
01	57	77
02	74	98

4.4.2 Inner Conductor

4.4.2.1 Material Characteristics

All strands used in the manufacture of the conductor shall be silver-coated high strength copper alloy.

On silver-coated strands, the thickness of silver shall be 2.0µm minimum.

For high strength copper alloy conductors, the tensile characteristics shall be not less than 6.0% in elongation and 35kg/mm^2 in tensile strength.

For determination of the conductor resistance at +20°C, as mentioned in Para. 9.5 of ESCC Generic Specification No. 3902, the α coefficient for copper alloy is 0.0035.

4.4.2.2 Stranding

The conductors shall be constructed of concentrically laid strands so as to produce a smooth and uniform conductor of circular cross-section and free from any high strands or other surface irregularities.

The length of lay of the external layer shall be not less than 8, nor more than 16 times the maximum conductor diameter specified in Table 1(a).

4.4.3 Dielectric

4.4.3.1 Material

Any dielectric material shall be virgin material, i.e. expanded, microporous PTFE or wrapped PTFE with only those additives that are necessary for processing and pigmentation.

Material
Expanded, microporous PTFE

4.4.3.2 Construction

The dielectric shall have a uniform cross-section throughout the length of the inner core or wire and the conductor shall be evenly centred in the dielectric.

The nominal diameter of the dielectric shall be in accordance with Table 1(a).

4.4.4 Filler

Fillers shall be used so as to ensure a smooth and uniform diameter under the shielding in order to contribute to a uniform impedance over the length of the cable.

4.4.4.1 Material

The filler material as used for the symmetric cables shall be expanded, microporous PTFE with only those additives necessary for processing.

The filler material as used for the round cable shell shall be PTFE with only the additives necessary for processing.

4.4.4.2 Construction

The filler material shall be extruded or wrapped from tapes to the diameters as given in Table 1(a).

4.4.5 Binder

~~Applicable to completed round cable only.~~ symmetric cables only var. 02 core and completed round cable core for both variants.

Binders shall be used as appropriate over ~~completed round cable core~~.

4.4.5.1 Material

The material shall be virgin, wrapped, expanded, microporous PTFE with only those additives necessary for processing.

4.4.5.2 Construction

The material shall be wrapped with an overlap of 50% maximum.

4.4.6 Shield

The terms "inner shield" and "outer shield" shall be used.

1 type of shield shall be used:-

(a) Braided Shield (BS).

4.4.6.1 Material Characteristics

All strands shall meet the requirements for silver-coated annealed copper as outlined in Para. 4.4.2.1 of this specification, but the thickness of silver shall be 2.5µm minimum.

Any strand shall show a 10% minimum elongation.

4.4.6.2 Construction

The strand size shall be as specified in Table 1(a) of this specification.

(a) **Braided Shield**

The braided shield type shall be of push-back type and provide not less than 90% coverage. The coverage factor K is calculated as follows:-

$$K = (2F - F^2)$$

$$F = \frac{N \times P \times d}{\sin \alpha}$$

$$\tan \alpha = 2\pi \frac{(D \times 2d) \times P}{C}$$

K = coverage (%).
N = number of strands.
d = shield strand diameter (mm).
α = angle of shield with cable axis in degrees.
D = effective diameter of core under shield (mm).
C = number of carriers.
P = serving pitch/mm.

4.4.7 Jacket

The cable shall have jackets for each of the inner symmetric cables and an outer jacket for the complete round cable.

4.4.7.1 Material Characteristics

The material shall be a layer of extruded fluoropolymer PFA, with only those additives that are necessary for processing and pigmentation.

4.4.7.2 Construction

The PFA shall be extruded such that the construction underneath is centred evenly within the jacket. The wall thickness for the inner jackets shall be ~~0.15~~ 0.20mm maximum, and for the outer jacket 0.25mm maximum.

4.4.8 Colours

The dielectric material, the fillers and ~~the jackets~~ binders shall be white.

The jacket colour for variant 01 shall be white.
The jacket colour for variant 02 shall be blue.

4.6.3 Circuits for Electrical Measurements

Not applicable.

4.7 BURN-IN TESTS

Not applicable.

4.8 ENVIRONMENTAL AND ENDURANCE TESTS (CHARTS IV AND V OF ESCC GENERIC SPECIFICATION NO. 3902)

4.8.1 Mechanical Properties of Conductor

As detailed in Paras. 4.4.2.1 and 4.4.6.1 of this specification.

4.8.2 Alternate Bending Resistance

The applied weights and bending diameter for alternate bending resistance are given in Table A.

Number of cycles : 500 minimum.

TABLE A - ALTERNATE BENDING RESISTANCE, LOAD AND DIAMETER

Type	Z_0 (Ω)	Weight (kg)	Bending Diameter (mm)
RC var.01	100	1.3	70
RC var. 02	100	1.5	90

4.8.3 Accelerated Ageing Stability

Ageing temperature : +200 ± 5 °C.
Shrinkage/Protrusion : See Table B.
Wrap Test : Mandrel diameters as per Table C.

TABLE B - SHRINKAGE/PROTRUSION

Type	Z_0 (Ω)	Max. Shrinkage or Protrusion (mm)
RC	100	2.0

Maximum Capacitance Change : +7.0%.

4.8.4 Cold Bend Test

Chamber temperature : −80 ± 5 °C.
Mandrel diameter and load : See Table C.

TABLE C - COLD BEND TEST, MANDREL DIAMETERS AND LOADS

Type	Z_0 (Ω)	Weight (kg)	Mandrel Diameter (mm)
RC var.01	100	1.3	70
RC var. 02	100	1.5	90

4.8.5 Solderability

No particular conditions are applicable.

TABLE 2 - ELECTRICAL MEASUREMENTS AT ROOM TEMPERATURE
ROUND CABLES

Type	ESCC Gen. Spec. No. 3902						
	Para. 9.6	Para. 9.6	Para. 9.7	Para. 9.9		Para. 9.10	Para. 9.20
	No. 1	No. 2	No. 3	No. 4		No. 5	No. 6
	Characteristic Diel. Strength of Inner Jacket (kVac)	Characteristic Diel. Strength of Outer Jacket (kVac)	Characteristic Voltage Test (Diel. Core) (kVdc)	Characteristic Capacitance (Max.) (pF/m)		Characteristic Impedance (Ω)	Characteristic Corona Extinction Voltage (Vac)
				Cond. - Cond.	Cond. - Shield		
RC var.01	1.5	2.0	1.4	50	90	100 ± 6	500
RC var.02	1.5	2.0	1.4	45	79	100 ± 6	500

No.	Characteristic	ESCC Gen. 3902	This Specification	Limits
7	Inner Conductor Resistance	Para. 9.5	-	See Table 1(a)
8	Insulation Resistance	Para. 9.8	-	5000MΩ × km
9	Shielding Effectiveness	-	Para. 4.8.17	See Figure 1(b)

SYMMETRIC CABLES

This Specification		
Para. 4.8.18	Para. 4.8.19	Para. 4.8.19
No. 10	No. 11	No. 12
Characteristic Time Delay (Max.) (nsec/m)	Characteristic Conductor Time Delay Difference (Max.) (nsec/m) Per Pair	Characteristic Conductor Time Delay Difference (Max.) (nsec/m) Pair to Pair
4.3	0.08	0.13

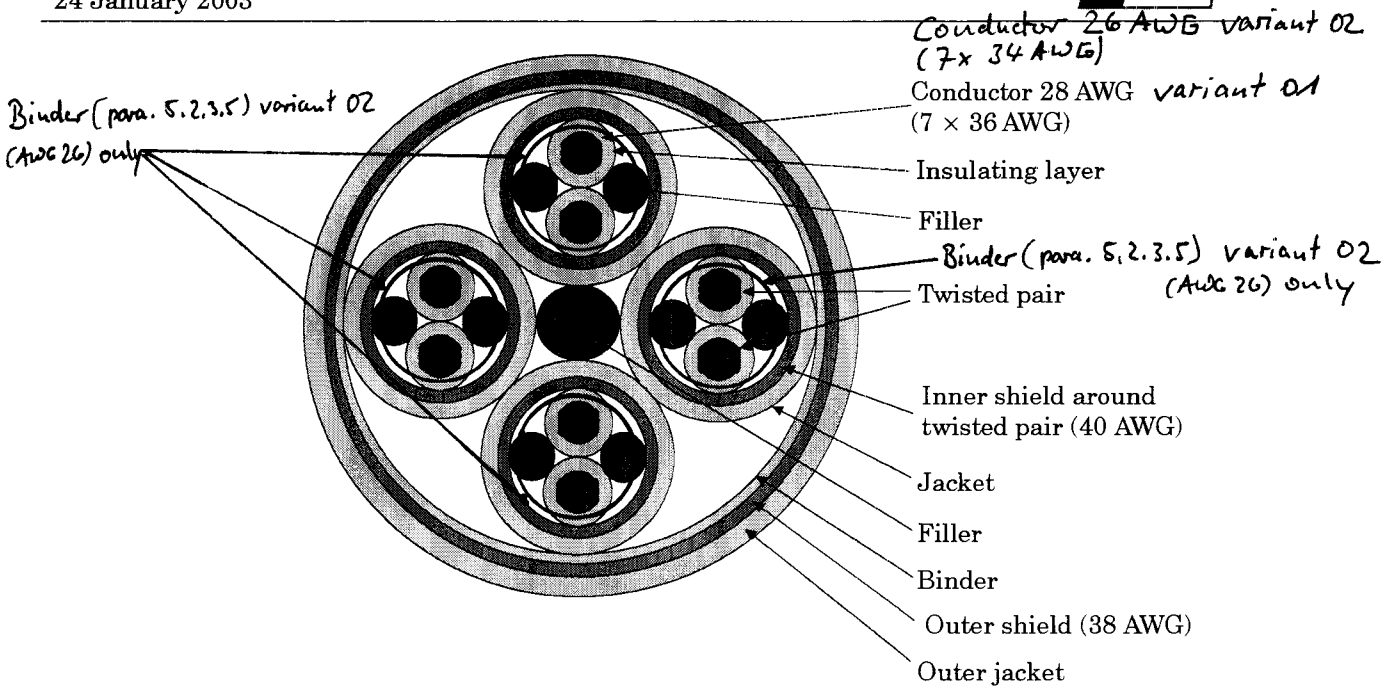

Figure 9: SpaceWire cable construction

5.2.2 Inner conductors

5.2.2.1 Conductor

for variant 01

a. Each signal wire shall be 28 AWG, constructed from seven strands of 36 AWG silver-coated, high-strength copper alloy.

b. The thickness of the silver coating shall be 2,0 µm minimum.

Each signal wire shall be AWG 26 for variant 02
Constructed from seven strands of 34 AWG
Silver coated, high strength copper alloy.

5.2.2.2 Tensile characteristics

a. The minimum elongation of each strand shall be 6,0 %.

b. The tensile strength of each strand shall be at least 350 N/mm^2.

5.2.2.3 Insulator

Each signal shall be insulated using expanded, microporous PTFE with only those additives for processing and pigmentation.

5.2.2.4 Insulator colour

The insulator around the signal wires shall be white.

5.2.2.5 Electrical characteristics

The maximum DC resistance of the inner conductor shall be 256 Ω/km. for AWG 28
The maximum DC resistance of the inner conductor shall be 159 Ω/km for AWG 26

5.2.3 Twisted pair

5.2.3.1 Lay-length

The lay-length of the two insulated conductors comprising a differential signal pair shall not be less than 12 times and not more than 16 times the outside diameter of the unshielded twisted pair.

5.2.3.2 Fillers

Fillers shall be used with the differential signal pairs so as to ensure a smooth and uniform diameter under the shielding in order to contribute to a uniform impedance over the cable.

5.2.3.5 Binder (only variant 02 AWG 26)
A binder shall be applied over the twisted pair and the two fillers to keep the twisted pair and the fillers together in a fixed position
Binder material and construction see para. 5.2.4.6 and 5.2.4.7

5.2.3.3 Filler material

The filler material as used for the differential signal pairs shall be expanded microporous PTFE with only those additives for processing.

5.2.3.4 Construction of filler

The filler material shall be extruded or wrapped from tapes to a diameter of 1,0 mm. nominal

5.2.3.~~5~~ 6 Shield

a. Each differential signal pair shall be shielded by a braided shield.

b. The braided shield type shall be of push-back type and provide not less than 90 % coverage.

5.2.3.~~6~~ 7 Shield wire size

The shield wire size shall be 40 AWG.

5.2.3.~~7~~ 8 Shield material

a. All strands used in the manufacture of the braided shield shall be silver-coated, soft or annealed oxygen-free high conductivity copper.

b. The thickness of silver shall be 2,5 µm minimum.

c. Any strand shall show an elongation of 10 % minimum.

5.2.3.~~8~~ 9 Protective sheath

The protective sheath for the shielded differential signal pairs shall be a layer of extruded fluorpolymer PFA with only those additives for processing and pigmentation.

5.2.3.~~9~~ 10 Protective sheath wall thickness

The wall thickness of the protective sheath for the shielded differential signal pair shall be ~~0,15 mm nominal.~~ 0,20 mm maximal.

5.2.3.~~10~~ 11 Protective sheath colour

The jacket colour of the differential signal pairs shall be white. for AWG 28 and blue for AWG 26

5.2.3.~~11~~ 12 Characteristic impedance

The characteristic impedance of each differential signal pair shall be (100 ± 6) Ω differential impedance.

5.2.3.~~12~~ 13 Skew

The skew between each signal in each differential signal pair shall be less than 0,1 ns/m.

5.2.4 Complete cable

5.2.4.1 Construction

Four sets of differential signal pairs shall be twisted together not less than 12 times and not more than 16 times the outside diameter of two shielded and jacketed differential signal pairs.

5.2.4.2 Filler

A filler shall be used in the centre of the four differential signal pairs so as to ensure a smooth and uniform diameter under the shielding in order to contribute to a uniform impedance over the cable.

5.2.4.3 Filler material

The filler material as used for the complete cable shall be microporous PTFE with only those additives for processing.

5.2.4.4 Construction of filler

The filler material shall be extruded or wrapped from tapes to a diameter of 1,0 mm. for variant 01 (AWG28) and 1,4 mm for variant 02 (AWG 26)

5.2.4.5 Binder

A binder shall be applied over the four differential signal pairs and central filler to keep the signal pairs and filler together in a fixed position.

5.2.4.6 Binder material

The material shall be virgin, wrapped, expanded microporous PTFE with only those additives for processing.

5.2.4.7 Binder construction

The material shall be wrapped with an overlap of 50 % maximum.

5.2.4.8 Outer shield

a. The set of four jacketed and screened differential signal pairs shall be shielded by an outer braided shield.

b. The braided shield type shall be of push-back type and provide not less than 90 % coverage.

5.2.4.9 Outer shield wire size

The shield wire size shall be 38 AWG.

5.2.4.10 Outer shield material

a. All strands used in the manufacture of the braided shield shall be silver-coated, soft or annealed oxygen-free high conductivity copper.

b. The thickness of silver shall be 2,5 µm minimum.

c. Any strand shall show an elongation of 10 % minimum.

5.2.4.11 Shield isolation

The twisted pair shields shall not make contact with one another nor with the outer shield.

5.2.4.12 Outer jacket

The outermost jacket over the four twisted screened and jacketed differential signal pairs shall be a layer of extruded Fluoropolymer PFA with only those additives for processing and pigmentation.

5.2.4.13 Outer jacket wall thickness

The wall thickness of the jacket for the shielded differential signal pair shall be 0,25 mm nominal.

5.2.4.14 Jacket colour

a. The colour of the jacket shall be white. for variant 01 (AWG 28) and blue for variant 02 (AWG 26)

b. There shall be no identifying marking on the cable jacket.

NOTE Applying pressure to the cable during the marking process can adversely affect the electrical properties of the cable.

5.2.4.15 Signal skew

a. The skew between the parts of the differential signal in one differential signal pair shall be 0,1 ns/m maximum.

b. The skew between one differential signal pair and each other differential signal pair within the cable shall be 0,15 ns/m maximum.

5.2.5 Cable physical parameters

5.2.5.1 Cable diameter

The outside diameter of the complete cable shall be 7 mm maximum. for variant 01 (AWG 28)
The outside diameter of the complete cable shall be 9mm maximum for variant 02 (AWG 26)

5.2.5.2 Cable minimum bend radius

The minimum bend radius of complete cable shall be 45 mm. for variant 01 (AWG 28)
The minimum bend radius of complete cable shall be 60mm for variant 02 (AWG 26)

5.2.5.3 Adhesion of inner conductor

The minimum stripping force shall be 1,0 N.

5.2.5.4 Cable weight

The maximum weight of the SpaceWire cable shall be 80 g/m. for variant 01 (AWG 28)
The maximum weight of the SpaceWire cable shall be 100g/m for variant 02 (AWG 26)

5.2.5.5 Cable maximum ratings

a. The maximum ratings defined in Table 1 shall be met.

b. The total temperature of the wire (i.e. ambient plus rise) shall not exceed the maximum operating temperature of the wire.

Table 1: SpaceWire cable maximum ratings

No.	Characteristics	Symbol	Maximum ratings	Unit	Remarks
1	Operating voltage (continuous)	V_{op}	200	V_{rms}	
2	Current	I	1,5 2,5	A	AWG 28 AWG 26
3	Operating rate	F_M	400	Mb/s	
4	Operating temperature range	T_{op}	-200 to +180	°C	T_{amb} [a]
5	Storage temperature range	T_{stg}	-200 to +180	°C	

[a] The specified current generates a temperature rise of approximately 50 °C above ambient temperature in a vacuum environment. See 5.2.5.5 b. for precautions to take on the total temperature of the wire.

5.3 Connectors

5.3.1 General

The SpaceWire connector shall be a nine contact micro-miniature D-type with solder contacts, as defined in ESCC 3401/071, or crimp contacts.

5.3.2 Receptacles

a. Receptacles shall be used on board and unit assemblies.

b. Receptacles shall be equipped with female contacts.

c. Receptacles with flying leads should be used for connection to a PCB rather than PCB mounting connectors to improve mechanical shock and vibration resistance of the unit.

Amended MARK-UP FOR DCR 281

S.T — ~~27/3/08~~. 01/04/2008

TABLE 1(a) - TYPE VARIANTS

Variant	Z_0 (Ω)	AWG	Inner Conductor				Insul. Wire	Filler SC	Shield SC		Binder SC
			No. of Strands x ⌀ (mm)	Max. ⌀ (mm)	Nom. Sect. (mm^2)	Max. d.c. Resist. (Ω/km)	Max. ⌀ (mm)	⌀ (mm)	Constr.	Strand ⌀ (mm)	Nom. ⌀ (mm)
01	100	28	7x0.126	0.39	0.089	256	1.2	1.0	BS	0.079	—
02	100	26	7x0.160	0.49	0.141	159	1.4	1.0	BS	0.079	~~0.003~~ 0.076

Symmetric Cable Characteristics		Filler RC	Binder RC	Outer Shield RC		Round Cable Characteristics		Bend Radius
Max. ⌀ (mm)	Max. Weight (kg/km)	⌀ (mm)	Nom. ⌀ (mm)	Constr.	Strand ⌀ (mm)	Max. ⌀ (mm)	Max. Weight (kg/km)	Min. (mm)
2.7	12	1.0	~~0.004~~	BS	0.102	7.5	85	45
3.1	15	1.4	~~0.004~~ 0.102	BS	0.102	9.0	100	60

TABLE 1(b) - MAXIMUM RATINGS

No.	Characteristics	Symbol	Maximum Ratings	Unit	Remarks
1	Operating Voltage (Continuous)	V_{op}	200	V_{rms}	-
2	Current	I	1.5 ~~2.5~~	A	AWG 28 AWG 26
3	Operating Frequency	f_M	400	MHz	10 metres.
			~~100~~	~~Mbit/sec~~	~~Assembly~~
5 ~~4~~	Operating Temperature Range	T_{op}	−200 to +180	°C	T_{amb} Note 1
6 ~~5~~	Storage Temperature Range	T_{stg}	−200 to +180	°C	-
7 ~~6~~	Soldering Temperature	T_{sol}	+250	°C	Note 2

NOTES

1. Precautions shall be taken such that the aggregate temperature of the datalines (ambient plus rise), due to power dissipation, does not exceed the maximum operating temperature.
2. For 5 seconds maximum.

4	Data Transmission Rate Variant 01 Variant 02	DTR	 100 200	Mbit/sec	Assembly

FIGURE 1 - PARAMETER DERATING INFORMATION

FIGURE 1(a) - ALLOWABLE CURRENT VERSUS TEMPERATURE

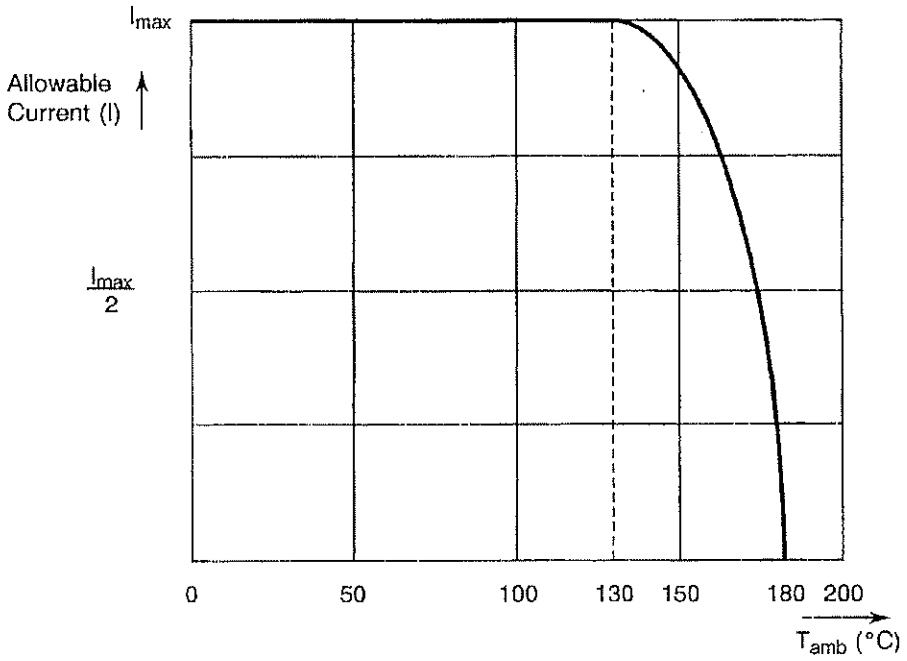

FIGURE 1(b) - MINIMUM SHIELDING EFFECTIVENESS

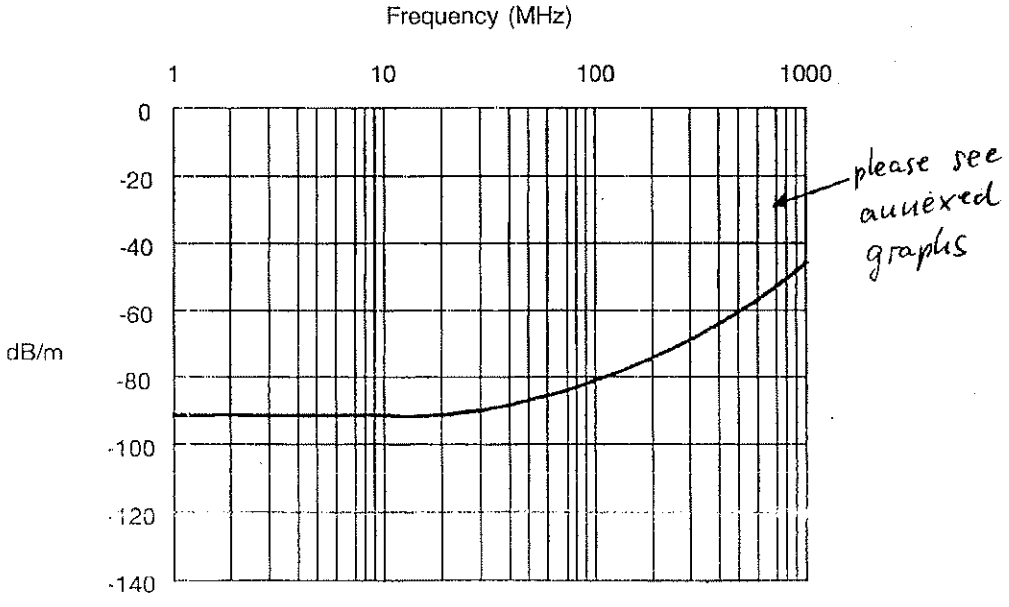

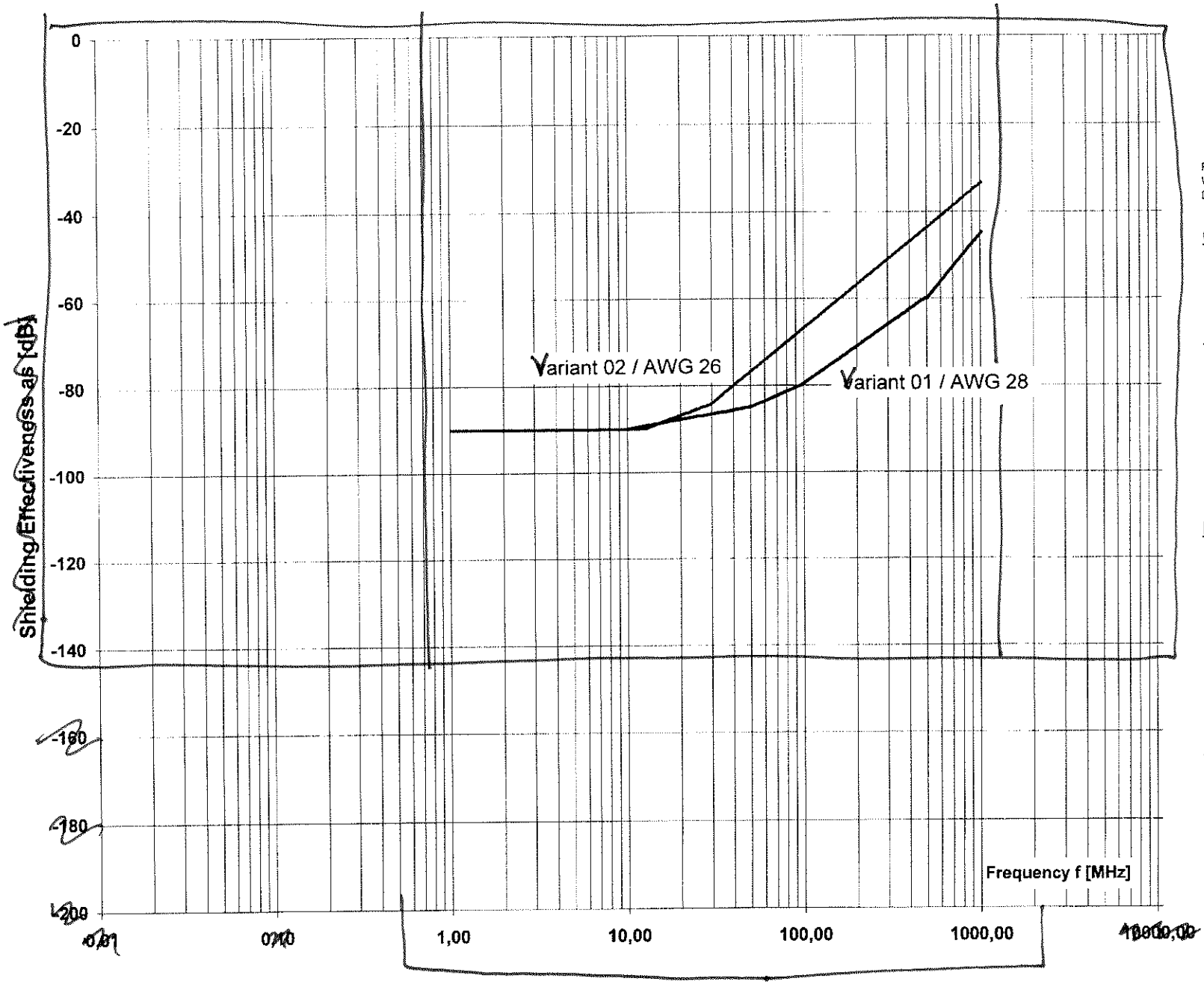

Paratron®

Paratron ist eingetragenes Warenzeichen
Der W.L. Gore & ASSOCIATES GmbH

Construction:

Lot no.:

06.09.2006

K. Opitz

Remark:

variant 01 / AWG 28
variant 02 / AWG 26

measured according to IEC 61196-1 EN 50289-1-6

W.L. Gore & Associates GmbH
Nordring 1
D-91785 Pleinfeld
Tel.(09144)601-0

FIGURE 2 - PHYSICAL CHARACTERISTICS

FIGURE 2(a) - SINGLE SYMMETRIC CABLE - VARIANT 01

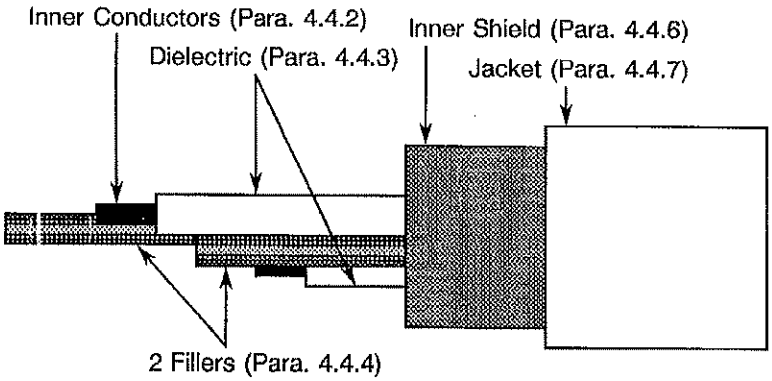

NOTES

1. See Table 1(a) for dimensions.

FIGURE 2(b) - ROUND CABLE - VARIANT 01

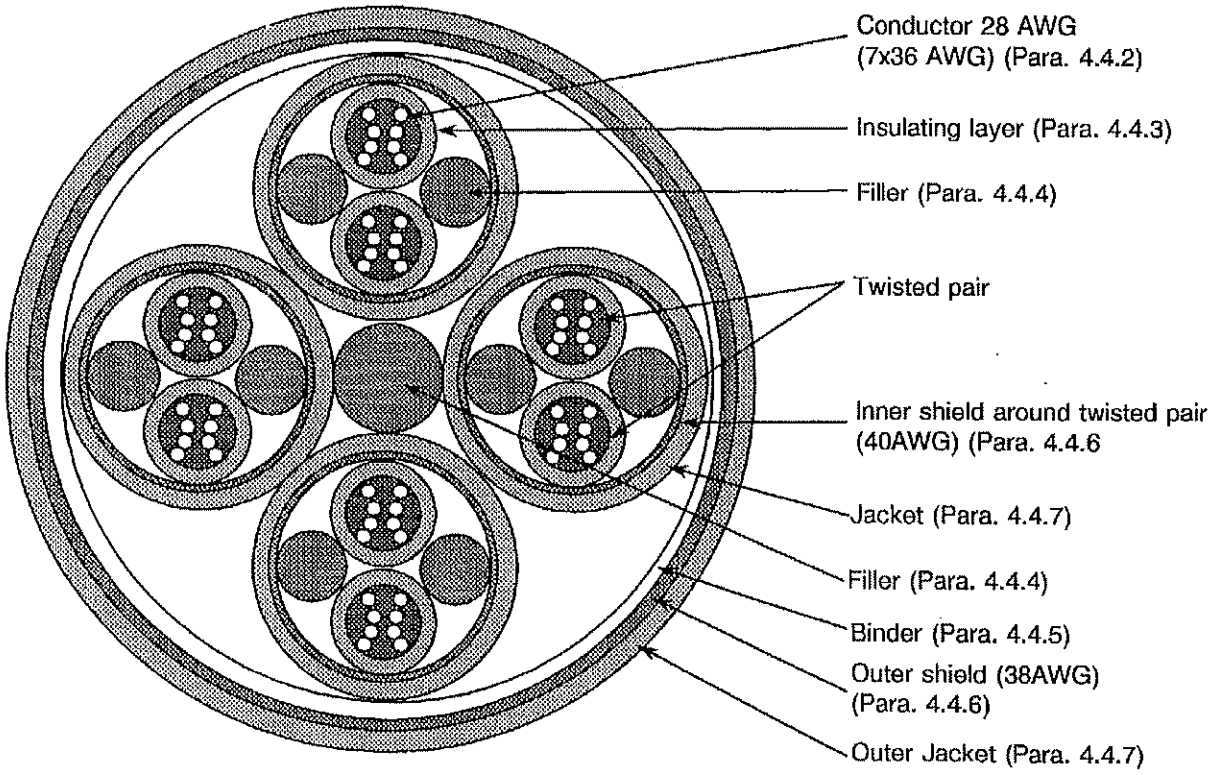

FIGURE 2 - PHYSICAL CHARACTERISTICS

FIGURE 2(c) - SINGLE SYMMETRIC CABLE – VARIANT 02

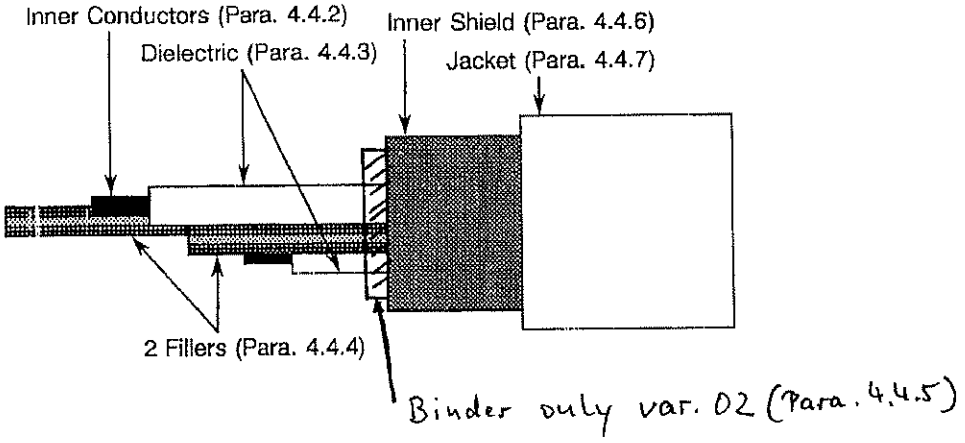

NOTES

1. See Table 1(a) for dimensions.

FIGURE 2(d) - ROUND CABLE – VARIANT 02

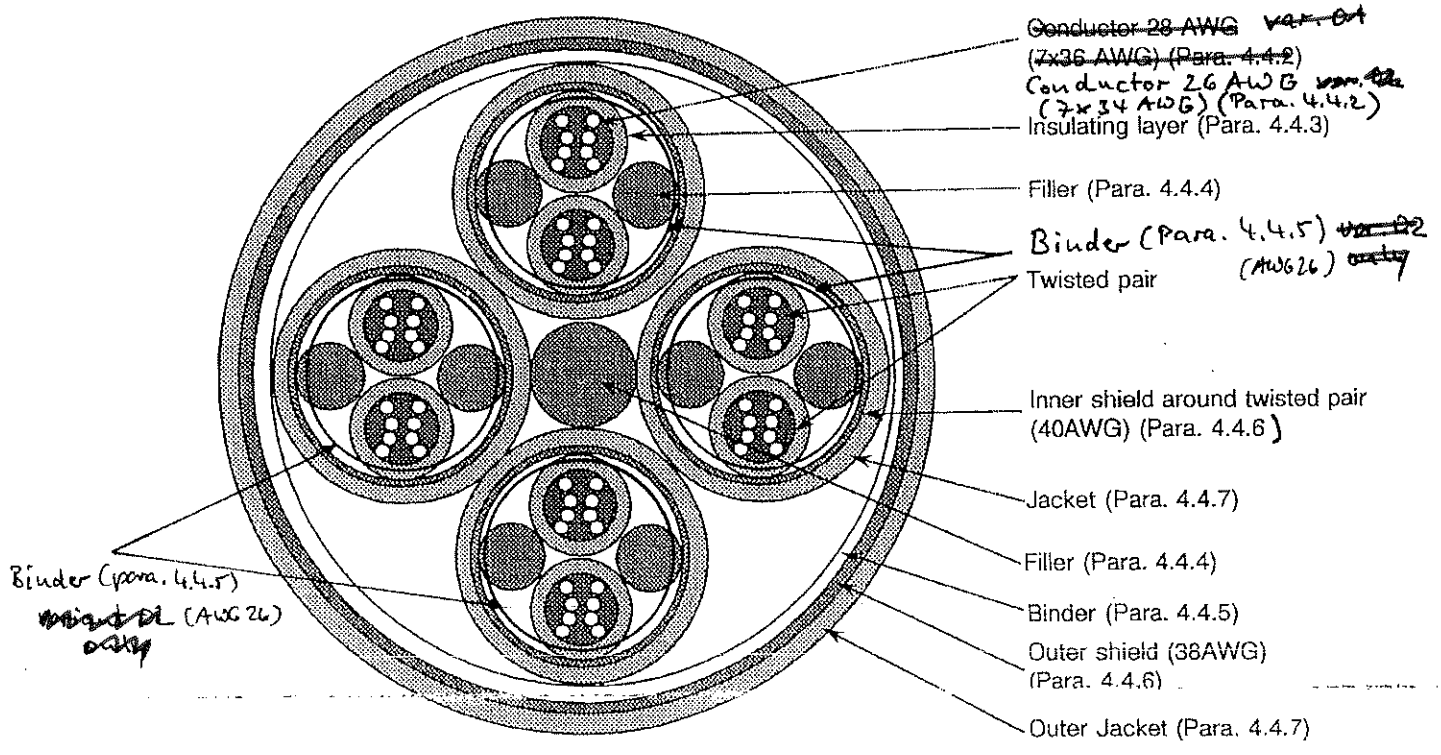

4.2.3 Deviations from Burn-in and Electrical Measurements (Chart III)

None.

4.2.4 Deviations from Qualification Tests (Chart IV)

(a) Para. 9.7, Voltage Test: To be performed in accordance with Para. 4.8.13 of this specification.

(b) Para. 9.10, Characteristic Impedance: To be performed in accordance with Para. 4.8.14 of this specification.

(c) Para. 9.11, Attenuation: Shall not be performed.

(d) Para. 9.12, Structural Return Loss: Shall not be performed.

(e) Shielding Effectiveness: Shall be performed in accordance with Para. 4.8.17 of this specification at any point in Chart IV.

4.2.5 Deviations from Lot Acceptance Tests (Chart V)

(a) Para. 9.11, Attenuation: Shall not be performed.

(b) Para. 9.12, Structural Return Loss: Shall not be performed.

4.3 MECHANICAL REQUIREMENTS

4.3.1 Dimension Check

The dimensions of the datalines specified herein shall be checked. They shall conform to those shown in Table 1(a), Figure 2 and Para. 4.4 of this specification (see the Table following for list of parameters to be checked).

4.3.2 Weight

The maximum weight of the datalines specified herein shall be measured in accordance with Para. 9.2 of ESCC Generic Specification No. 3902 and shall be as specified in Table 1(a) of this specification.

4.3.3 Adhesion of the Inner Conductor

Minimum stripping force: 1.0N.

4.4 MATERIALS AND FINISHES

The materials and finishes shall be as specified herein. Where a definite material is not specified, a material which will enable the components specified herein to meet the performance requirements of this specification shall be used. Acceptance or approval of any constituent material does not guarantee acceptance of the finished product.

4.4.1 Construction of Round Cable

4.4.1.1 Generic Construction

The round cable with symmetric cables consists of four impedance controlled datalines with an overall shield and jacket. The datalines are constructed such that two conductors, each evenly centred within a dielectric, are twisted together with two fillers and then covered by a shield and jacket in accordance with Figure 2(a), Variant 02 also includes a binder under the shield and Figure 2(c).

4.4.1.2 Lay Length of Symmetric Cables

The lay length of all symmetric cables twisted together shall not be less than 12 times and not more than 16 times the outside diameter of the unshielded and unjacketed cable. This requirement will lead to the following lay length and/or twist per metre respectively.

variant	Lay Length (mm)		Twists/Metre	
	Min.	Max.	Min.	Max.
01	24	32	32	41
02	27	35	29	37

4.4.1.3 Lay Length of the complete Cable

Four sets of symmetric cables twisted together shall not be less than 12 times and not more than 16 times the outside diameter of two symmetric cables. This construction shall be the core to be covered by a binder and a braided shield, i.e. outer conductor. This construction is then covered by an outermost jacket in accordance with Figure 2(b).

variant	Lay Length (mm)	
	Min.	Max.
01	57	77
02	74	98

4.4.2 Inner Conductor

4.4.2.1 Material Characteristics

All strands used in the manufacture of the conductor shall be silver-coated high strength copper alloy.

On silver-coated strands, the thickness of silver shall be 2.0µm minimum.

For high strength copper alloy conductors, the tensile characteristics shall be not less than 6.0% in elongation and 35kg/mm^2 in tensile strength.

For determination of the conductor resistance at +20°C, as mentioned in Para. 9.5 of ESCC Generic Specification No. 3902, the α coefficient for copper alloy is 0.0035.

4.4.2.2 Stranding

The conductors shall be constructed of concentrically laid strands so as to produce a smooth and uniform conductor of circular cross-section and free from any high strands or other surface irregularities.

The length of lay of the external layer shall be not less than 8, nor more than 16 times the maximum conductor diameter specified in Table 1(a).

4.4.3 Dielectric

4.4.3.1 Material

Any dielectric material shall be virgin material, i.e. expanded, microporous PTFE or wrapped PTFE with only those additives that are necessary for processing and pigmentation.

Material
Expanded, microporous PTFE

4.4.3.2 Construction

The dielectric shall have a uniform cross-section throughout the length of the inner core or wire and the conductor shall be evenly centred in the dielectric.

The nominal diameter of the dielectric shall be in accordance with Table 1(a).

4.4.4 Filler

Fillers shall be used so as to ensure a smooth and uniform diameter under the shielding in order to contribute to a uniform impedance over the length of the cable.

4.4.4.1 Material

The filler material as used for the symmetric cables shall be expanded, microporous PTFE with only those additives necessary for processing.

The filler material as used for the round cable shell shall be PTFE with only the additives necessary for processing.

4.4.4.2 Construction

The filler material shall be extruded or wrapped from tapes to the diameters as given in Table 1(a).

4.4.5 Binder

~~Applicable to completed round cable only.~~ core for Variant 02 only and the symmetric cables for Variant 01 and 02

Binders shall be used as appropriate over ~~completed round cable core.~~ over the completed round cable core for both variants.

4.4.5.1 Material

The material shall be virgin, wrapped, expanded, microporous PTFE with only those additives necessary for processing.

4.4.5.2 Construction

The material shall be wrapped with an overlap of 50% maximum.

4.4.6 Shield

The terms "inner shield" and "outer shield" shall be used.

1 type of shield shall be used:-

(a) Braided Shield (BS).

4.4.6.1 Material Characteristics

All strands shall meet the requirements for silver-coated annealed copper as outlined in Para. 4.4.2.1 of this specification, but the thickness of silver shall be 2.5µm minimum.

Any strand shall show a 10% minimum elongation.

4.4.6.2 Construction

The strand size shall be as specified in Table 1(a) of this specification.

(a) **Braided Shield**

The braided shield type shall be of push-back type and provide not less than 90% coverage. The coverage factor K is calculated as follows:-

$$K = (2F - F^2)$$

$$F = \frac{N \times P \times d}{\sin \alpha}$$

$$\tan \alpha = 2\pi \frac{(D \times 2d) \times P}{C}$$

K = coverage (%),
N = number of strands.
d = shield strand diameter (mm).
α = angle of shield with cable axis in degrees.
D = effective diameter of core under shield (mm).
C = number of carriers.
P = serving pitch/mm.

4.4.7 Jacket

The cable shall have jackets for each of the inner symmetric cables and an outer jacket for the complete round cable.

4.4.7.1 Material Characteristics

The material shall be a layer of extruded fluoropolymer PFA, with only those additives that are necessary for processing and pigmentation.

4.4.7.2 Construction

The PFA shall be extruded such that the construction underneath is centred evenly within the jacket. The wall thickness for the inner jackets shall be ~~0.18~~ 0,20mm maximum, and for the outer jacket 0.25mm maximum.

4.4.8 Colours

The dielectric material, the fillers and ~~the jackets~~ binders shall be white.

The jacket colour for variant 01 shall be white.
The jacket colour for variant 02 shall be blue.

4.6.3 Circuits for Electrical Measurements

Not applicable.

4.7 BURN-IN TESTS

Not applicable.

4.8 ENVIRONMENTAL AND ENDURANCE TESTS (CHARTS IV AND V OF ESCC GENERIC SPECIFICATION NO. 3902)

4.8.1 Mechanical Properties of Conductor

As detailed in Paras. 4.4.2.1 and 4.4.6.1 of this specification.

4.8.2 Alternate Bending Resistance

The applied weights and bending diameter for alternate bending resistance are given in Table A.

Number of cycles : 500 minimum.

TABLE A - ALTERNATE BENDING RESISTANCE, LOAD AND DIAMETER

Type	Z_0 (Ω)	Weight (kg)	Bending Diameter (mm)
RC var.01	100	1.3	70
RC var. 02	100	1.5	90

4.8.3 Accelerated Ageing Stability

Ageing temperature : +200 ± 5 °C.
Shrinkage/Protrusion : See Table B.
Wrap Test : Mandrel diameters as per Table C.

TABLE B - SHRINKAGE/PROTRUSION

Type	Z_0 (Ω)	Max. Shrinkage or Protrusion (mm)
RC	100	2.0

Maximum Capacitance Change : +7.0%.

4.8.4 Cold Bend Test

Chamber temperature : −80 ± 5 °C.
Mandrel diameter and load : See Table C.

TABLE C - COLD BEND TEST, MANDREL DIAMETERS AND LOADS

Type	Z_0 (Ω)	Weight (kg)	Mandrel Diameter (mm)
RC var.01	100	1.3	70
RC var. 02	100	1.5	90

4.8.5 Solderability

No particular conditions are applicable.

TABLE 2 - ELECTRICAL MEASUREMENTS AT ROOM TEMPERATURE
ROUND CABLES

Type	ESCC Gen. Spec. No. 3902						
	Para. 9.6	Para. 9.6	Para. 9.7	Para. 9.9		Para. 9.10	Para. 9.20
	No. 1	No. 2	No. 3	No. 4		No. 5	No. 6
	Characteristic Diel. Strength of Inner Jacket	Characteristic Diel. Strength of Outer Jacket	Characteristic Voltage Test (Diel. Core)	Characteristic Capacitance (Max.) (pF/m)		Characteristic Impedance	Characteristic Corona Extinction Voltage (Vac)
	(kVac)	(kVac)	(kVdc)	Cond. - Cond.	Cond. - Shield	(Ω)	
RC var.01	1.5	2.0	1.4	50	90	100 ± 6	500
RC var.02	1.5	2.0	1.4	45	79	100 ± 6	500

No.	Characteristic	ESCC Gen. 3902	This Specification	Limits
7	Inner Conductor Resistance	Para. 9.5	-	See Table 1(a)
8	Insulation Resistance	Para. 9.8	-	5000MΩ × km
9	Shielding Effectiveness	-	Para. 4.8.17	See Figure 1(b)

SYMMETRIC CABLES

This Specification		
Para. 4.8.18	Para. 4.8.19	Para. 4.8.19
No. 10	No. 11	No. 12
Characteristic Time Delay (Max.) (nsec/m)	Characteristic Conductor Time Delay Difference (Max.) (nsec/m) Per Pair	Characteristic Conductor Time Delay Difference (Max.) (nsec/m) Pair to Pair
4.3	0.08	0.13