DOCUMENT CHANGE REQUEST

DCR number 317	Changes required for: N/A	Originator: Olivier Masson Chief
Date: 2007/02/01	Date sent: 2007/02/01	Organisation: CNES
Status: IMPLEMENTED		

Title:	Contacts Coaxial Crimp-type and Solder-Type for 3401/001 and 3401/002 Connectors		
Number:	3401/004	Issue:	2

Other documents affected:

Page:

Pages 6 and 10 modified.
One new page added.

Paragraph:

Pages 6 and 10 modified.
One new page added.

Original wording:

Proposed wording:

See attached draft of the new and modified pages.

Justification:

Coaxial contact for PCB (90 PC and straight PC versions) requested by European Space Customers (Tesat and Contraves for example).

ITT current qualification is valid until August 2007.
We would like to introduce these variantes in our requalification programm.

Attachments:

dcr317att_markup3401004_08_09_19.pdf, 3401004_new1.pdf, null

Modifications:

The following change wording is based on the original DCR317 plus discussions, reviews and conclusions made by the ESCC Executive Secretariat and Manufacturer C&K since December 2007.

The following items detail all the changes proposed and replace the original contents of this DCR.

1 - Specification title on page 1 and in para 1.1 amended to also refer to 'PCB-type'.

2 - Spec Title & Para 1.1 & 2,
Delete reference to 3401/002 connectors.
Correct the titles for ESCC 3401 & 3401/001 as shown in the attachment.

3 - Table 1(a)
Add new Variants 21 to 24 with details as shown in the attachment.
Amend 'Rear End' column contents to be 'Straight Cable' or '90deg Cable' as applicable

4 - Table 1(a) & 2, amend 'MIL-C-17' to be 'MIL-DTL-17'

5 - Figure 1, add '0' labels to x & y axes for both figures

6 - Figure 2, Figures for new variants 21 to 24 added as shown in the attachment.

7 - Figure 2 (page 10) Maximum protrusion figure amended as shown in the attachment.

8 - Figure 2 (page 11) Dimension table. Dimensions for variants 21 to 24 added as shown in the attachment.

9 - Para 2, Delete items g & h and renumber remaining paras accordingly.

10 - Para 4.2.2, Delete item a.

11 - Para 4.2.4,
Correct the title to be '... Qualification Tests ... '
Correct the para references in items a, b & c per ESCC 3401 as shown in the attachment
Delete items d & e

12 - Para 4.2.4(c), Amend to read: '9.31 Solderability: Not applicable to Variants 11 to 20.'

13 - Para 4.2.5, Delete text and replace by items a & b as per amended para 4.2.4

14 - Para 4.3.1,
Correct para reference in 1st sentence to be 'Para. 9.6'
Add new sentence:
'Overall dimensions are specified with compatible inserts in ESCC Detail Specification No. 3401/001.'

15 - Para 4.3.3, Delete para in its entirety and replace by new para '4.3.13 Joint Strength (Variants 01 to 20)' as shown in the attachment.
Applied force is specified as 40Newtons minimum.

16 - Para 4.3.4, Delete para and move requirements to be part of Para 4.4.1.

17 - Para 4.3.5, 4.3.5.1 & 4.3.5.2, Correct the title to be 'Engagement and Separation Forces' (new para 4.3.9) and amend the paras as shown in the attachment.
New Variants 22 & 24 are added to the title of new para 4.3.9.1 and Variants 21 & 23 are added to the title of new para 4.3.9.2.
Both engagement & separation force limits (replacing 'Insertion') are included for outer & centre contacts in new paras 4.3.9.1 & 4.3.9.2.
Force units and values in new paras 4.3.9.1 & 4.3.9.2 are converted from grams-force to Newtons.
i.e.:
Outer contact engagement force in new para 4.3.9.1 is specified as 6.87Newtons maximum.
Outer contact separation force in new para 4.3.9.1 is specified as 0.83Newtons minimum.
Centre contact engagement force in new para 4.3.9.2 is specified as 3.33Newtons maximum (for max dia. test pin).
Centre contact separation force in new para 4.3.9.2 is specified as 2.22Newtons maximum (for max dia. test pin) & 0.28Newtons minimum (for min test pin dia.).
No limit is specified for centre contact engagement of the min dia. Test Pin.

18 - Para 4.3.6, 4.3.6.1, 4.3.6.2, Correct the title to be 'Contact Capability' (new para 4.3.3) and add new Variants 22 & 24 to the title of new para 4.3.3.1 and Variants 21 & 23 to the title of new para 4.3.3.2.

19 - Para 4.3.7, Amend to be new para 4.3.10

20 - Para 4.3.8, Delete 'Test' from title and amend to be new para 4.3.11

21 - Para 4.3.9, Add '(In Insert)' to title and amend to be new para 4.3.4.

22 - Para 4.3, Add new para '4.3.8 Contact Insertion and Withdrawal Forces' with text:
'The contact insertion and withdrawal forces shall be 65N maximum.'

23 - Para 4.3, Add new para '4.3.12 Solderability' with text:
'Not applicable to Variants 11 to 20. For all other Variants size A soldering iron shall be used.'

24 - Para 4.3, Add new paras 4.3.5, 4.3.6, 4.3.7 as shown in the attachment.

25 - Para 4.4.1, Delete 2nd sentence 'The contacts shall .... MIL-C-14500.' and replace with:
'Gold plating thickness shall be 1.27um minimum over 1um minimum of copper.'

26 - Para 4.4, Add new para '4.4.3 Magnetism Level' as shown in the attachment.

27 - TABLE 2, Correct the para references from ESCC 3401 as shown in the attachment.

28 - Para 4.8.6, Replace the 'Not applicable' by the text shown in the attachment.

29 - TABLE 6, Replace the table in its entirety by the new table 6 shown in the attachment.
Changes include:
- Delete item 'Female Contact Capability'
- Delete item 'Gold Plate Porosity'
- 'Contact Insertion and Withdrawal Forces' becomes part of new item 'Maintenance Aging'
- 'Crimp Visual Inspection' becomes part of new item 'Wiring'
- 'Solderability' is applicable to variants 01 to 10 & new variants 21 to 24
- 'Contact Resistance' becomes part of each applicable environmental/endurance test
- 'Crimp Tensile Strength', 'Pull Test' & 'Cable Retention Force' are replaced by 'Joint Strength'
- 'Contact Retention (In Insert)' is added to 'High Temperature Storage'
- 'Voltage Proof Altitude' becomes part of new item 'Climatic Sequence'
- New items are added as shown in the attachment: 'Wiring', 'Vibration, 'Shock or Bump', 'Climatic Sequence', 'Seal Test', Joint Strength', 'Rapid Change of Temperature', 'Contact Retention (In Insert)', 'Permanence of Marking', 'Mating/Unmating Forces', 'Corrosion', 'Insert Retention (In Shell)', 'Jackscrew Retention', 'High Temperature Measurements', 'Overload Test',

'Maintenance Aging', Engagement and Separation Forces'.

Justification:
After a full, detailed technical and editorial review of 3401/004 issue 2 many amendments have been identified as being necessary in order to be able to logically implement the changes in the original DCR317. The original justification provided by C&K still applies and the justification for all changes is as follows.

Note - The changes do not include any resulting from the generation of new ESCC spec No.80 (for D*BM savers); A new round of changes to the range of 3401/*** specs will be necessary once ESCC spec No.80 is published, in due course.

Editorial changes, proposed for the purposes of clarity, consistency and completeness, are based on the requirements specified in ESCC Generic specification No.3401 issue 1 plus the format and contents of other ESCC Detail specifications for contacts (e.g. 3401/005 issue 4). Editorial changes include the following items above:
Items 2 3 4 5 9 10 11 13 14 15 16 17 18 19 20 21 22 23 24 25 26 27 28 29

Specific technical changes are justified as follows:

Items 1, 3, 6, 7, 8, 17, 18, 29 - Introduction of new variants 21 to 24 per original DCR317.

Item 9, 25 - Definition of the plating materials & thickness' is considered sufficient without reference to the MIL specs; It is considered unnecessary to prescribe the actual material specifications to be applied by the Manufacturer (which will be controlled by their PID).

Items 12, 23, 29 - Solderability testing is applicable to solder & PCB contacts. The iron size proposed is the standard used by Manufacturer C&K.

Items 15, 29 - The force applied during the joint strength test on coaxial contacts needs to be specified in the detail spec. The value proposed is the standard used by Manufacturer C&K.

Item 17 - Both engagement and separation forces need to be specified (related to the Contact Capability limits). The values proposed are the standard values as defined by Manufacturer C&K.

Items 22, 29 - The contact insertion and withdrawal forces are not currently specified. The value proposed is the standard used by Manufacturer C&K.

Justification:
as above

Approval signature:

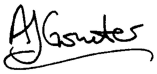

Date signed:

2007-02-01

CONCLUSION MARK-UP
DCR 317
4/9/8.
STC
FINAL VERSION
19/9/08

European Space Components Coordination

Pages 1 to 20

CONTACTS, COAXIAL, CRIMP-TYPE

~~AND~~ SOLDER-TYPE~~S~~ AND PCB-TYPE

FOR 3401/001 ~~AND 3401/002~~ CONNECTORS

ESCC Detail Specification No. 3401/004

ISSUE ~~2~~ 3

~~April 2003~~
August 2008.

Document Custodian: European Space Agency - see https://escies.org

1. GENERAL

1.1 SCOPE

This specification details the ratings, physical and electrical characteristics, test and inspection data for Coaxial Contacts, Crimp-type and Solder-type for 3401/001 Connectors.

It shall be read in conjunction with

- ESCC Generic Specification No. 3401, Connectors, Electrical, Circular and Rectangular.
- ESCC Detail Specification No. 3401/001, Connectors, Electrical, Rectangular, Miniature, Non-removable Solder and Wire-wrap Type Contacts and Removable Coaxial and Power Crimp-Type and Solder-Type Contacts, Based on Type D"M and
- ESCC Detail Specification No. 3401/002, Connectors, Electrical, Rectangular, Minjature, Removable Crimp-Type Contacts and Removable Coaxial and Power Crimp-Type and Solder-Type Contacts, Based on Type D"MA,

the requirements of which are supplemented herein.

These contacts are not mounted in the connectors and are therefore delivered separately.

1.2 TYPE VARIANTS

Variants of the basic types of contacts specified herein, which are also covered by this specification, are given in Table 1(a).

1.3 MAXIMUM RATINGS

The maximum ratings, which shall not be exceeded at any time during use or storage, applicable to the contacts specified herein, are scheduled in Table 1(b).

1.4 PARAMETER DERATING INFORMATION

The derating information applicable to the contacts specified herein is shown in Figure 1.

1.5 PHYSICAL DIMENSIONS

The physical dimensions of the contacts specified herein are shown in Figure 2.

1.6 FUNCTIONAL DIAGRAM

Not applicable.

TABLE 1(a) - TYPE VARIANTS

VARIANT	TYPE	REAR END	MAX. WEIGHT (g)	ACCEPTED CABLES (NOTE 1)	ASSEMBLY METHOD BRAID/SLEEVE
01	Male	Straight	1.4	RG 178 B U RG 196 A U KX 21 A	Solder
02	Female	Straight	1.5		Solder
03	Male	90°	2.0		Solder
04	Female	90°	2.2		Solder
05	Male	Straight	1.4	KX 22 A RG 179 B U RG 316 U RG 188 A U 50 CIS	Solder
06	Female	Straight	1.5		Solder
07	Male	90°	2.0		Solder
08	Female	90°	2.2		Solder
09	Male	Straight	1.5	RG 180 B U	Solder
10	Female	Straight	1.7		Solder
11	Male	Straight	1.4	RG 178 B U RG 196 A U KX 21 A	Crimp
12	Female	Straight	1.5		Crimp
13	Male	90°	2.0		Crimp
14	Female	90°	2.2		Crimp
15	Male	Straight	1.4	KX 22 A RG 179 B U RG 316 U RG 188 A U 50 CIS	Crimp
16	Female	Straight	1.5		Crimp
17	Male	90°	2.0		Crimp
18	Female	90°	2.2		Crimp
19	Male	Straight	1.5	RG 180 B U	Crimp
20	Female	Straight	1.7		Crimp

NOTES

1. 50 CIS in accordance with ESCC Detail Specification No. 3902/001.

   RG 178 B/U
   RG 196 A/U
   RG 179 B/U
   RG 316 U
   RG 188 A/U
   RG 180 B/U

   } in accordance with MIL-C-17.

   KX 21A/22A in accordance with NFC 93550.

Cable

TABLE 1 (a) – TYPE VARIANTS

Variant	Type	Rear End	Max (g) Weight (gr)	Accepted Cables (Note 1)	Assembly Method Braid / Sleeve
1	Male	Straight	1.4	RG 178 B U RG 196 A U KX 21 A	Solder
2	Female	Straight	1.5		Solder
3	Male	90 deg.	2.0		Solder
4	Female	90 deg.	2.2		Solder
5	Male	Straight	1.4	KX 22 A RG 179 B U RG 316 U RG 188 A U 50 CIS	Solder
6	Female	Straight	1.5		Solder
7	Male	90 deg.	2.0		Solder
8	Female	90 deg.	2.2		Solder
9	Male	Straight	1.5	RG 180 B U	Solder
10	Female	Straight	1.7		Solder
11	Male	Straight	1.4	RG 178 B U RG 196 A U KX 21 A	Crimp
12	Female	Straight	1.5		Crimp
13	Male	90 deg.	2.0		Crimp
14	Female	90 deg.	2.2		Crimp
15	Male	Straight	1.4	KX 22 A RG 179 B U RG 316 U RG 188 A U 50 CIS	Crimp
16	Female	Straight	1.5		Crimp
17	Male	90 deg.	2.0		Crimp
18	Female	90 deg.	2.2		Crimp
19	Male	Straight	1.5	RG 180 B U	Crimp
20	Female	Straight	1.7		Crimp
21	Male	Straight PCB	1.2	N.A	N.A
22	Female	Straight PCB	1	N.A	N.A
23	Male	90° deg. PCB	3.2	N.A	N.A
24	Female	90° deg. PCB	3	N.A	N.A
~~25~~	~~Saver~~	~~N.A~~	~~1.7~~	~~N.A~~	~~N.A~~

NOTES

1. 50 CIS in accordance with ESCC Detail Specification No. 3902/001.

   RG 178 B/U
   RG 196 A/U
   RG 179 B/U
   RG 316 U
   RG 188 A/U
   RG 180 B/U
   } in accordance with MIL-DTL-17.

   KX 21A/22A in accordance with NFC 93550.

TABLE 1(b) - MAXIMUM RATINGS

No.	CHARACTERISTICS	SYMBOL	MAXIMUM RATINGS	UNIT	REMARKS
1	Rated Voltage	U_R	See Figure 1	V	
2	Current Centre Contact	I_{CR}	7.5	A	Note 3
4	Frequency Range	f	up to 1.0	GHz	
5	VSWR up to 1.0GHz	-	1.4	-	Note 1
6	RF Insertion Loss at 1.0GHz	-	0.2	dB	Note 2
7	Operating Temperature Range	T_{op}	−55 to +125	°C	
8	Storage Temperature Range	T_{stg}	−55 to +125	°C	
9	Soldering Temperature	T_{sol}	+260	°C	Note 4

NOTES

1. ESCC Generic Specification No. 3402, Para. 9.16.
2. ESCC Generic Specification No. 3402, Para. 9.19.
3. May be limited by cable current-carrying capability.
4. 10 seconds maximum.

FIGURE 1 - PARAMETER DERATING INFORMATION

Voltage Proof versus Altitude

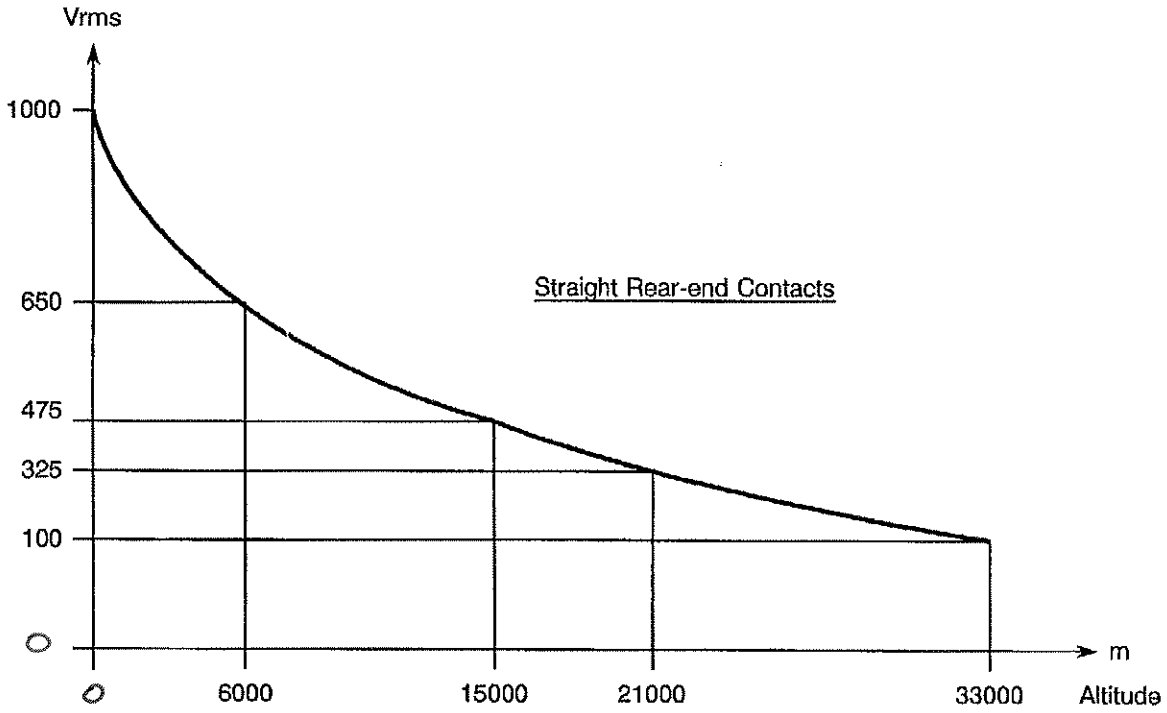

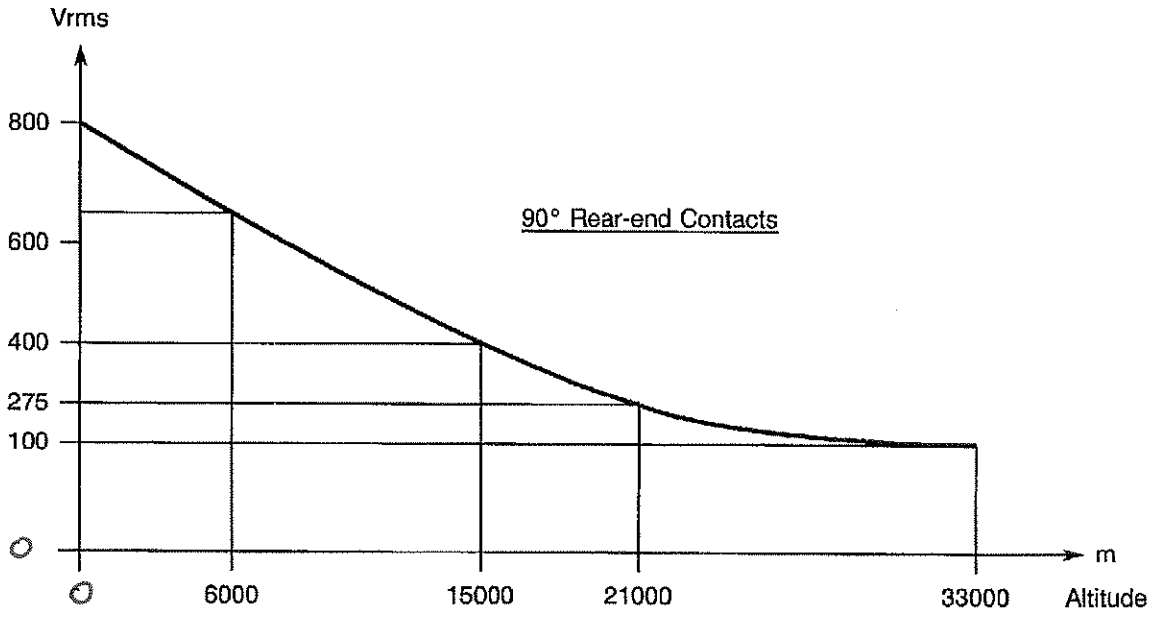

FIGURE 2 - PHYSICAL DIMENSIONS

Female Coaxial Contact
(Male Centre Contact)

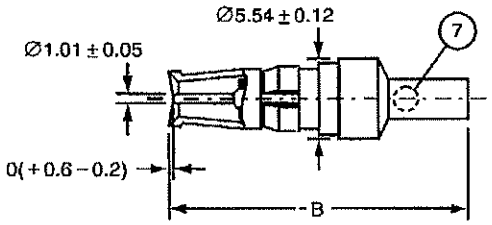

Variants 02, 06, 12, 16

Male Coaxial Contact
(Female Centre Contact)

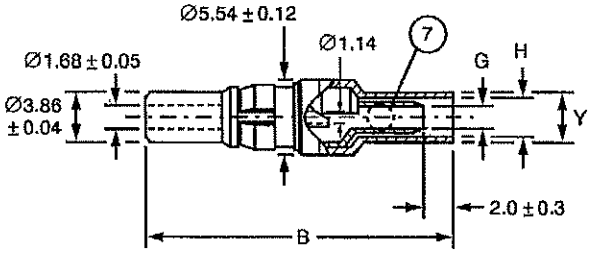

Variants 01, 05, 11, 15

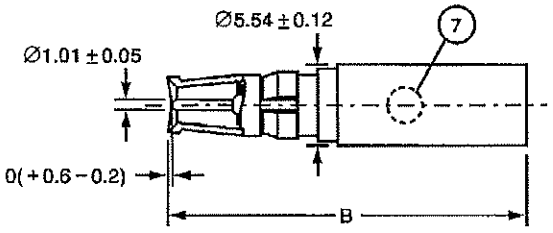

Variants 10, 20

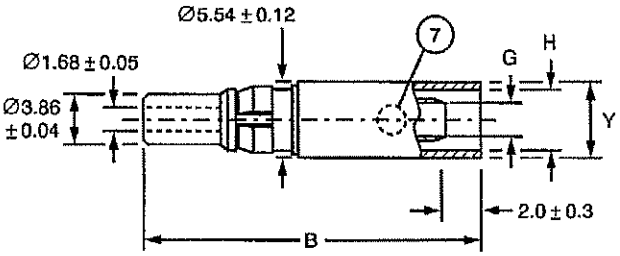

Variants 09, 19

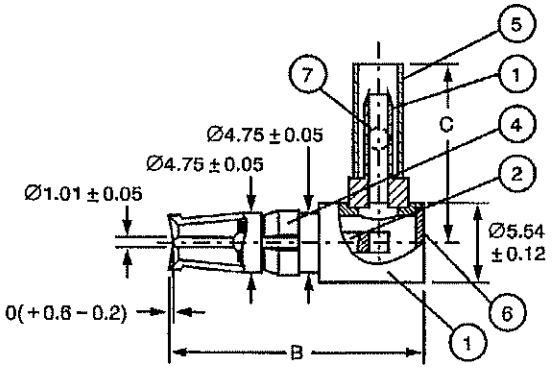

Variants 04, 08, 14, 18

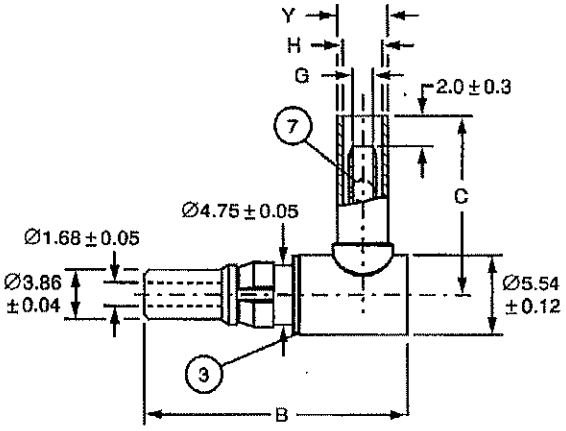

Variants 03, 07, 13, 17

1. Outer contact.
2. Centre contact
3. Washer (optional).
4. Ring.
5. Sleeve.
6. Cap.
7. Vent hole for solder (Variants 01 to 10 only).

Dimensions in millimetres. For lettered dimensions, see Table on Page 14.

New Page

FIGURE 2 – PHYSICAL DIMENSIONS (CONTINUED)

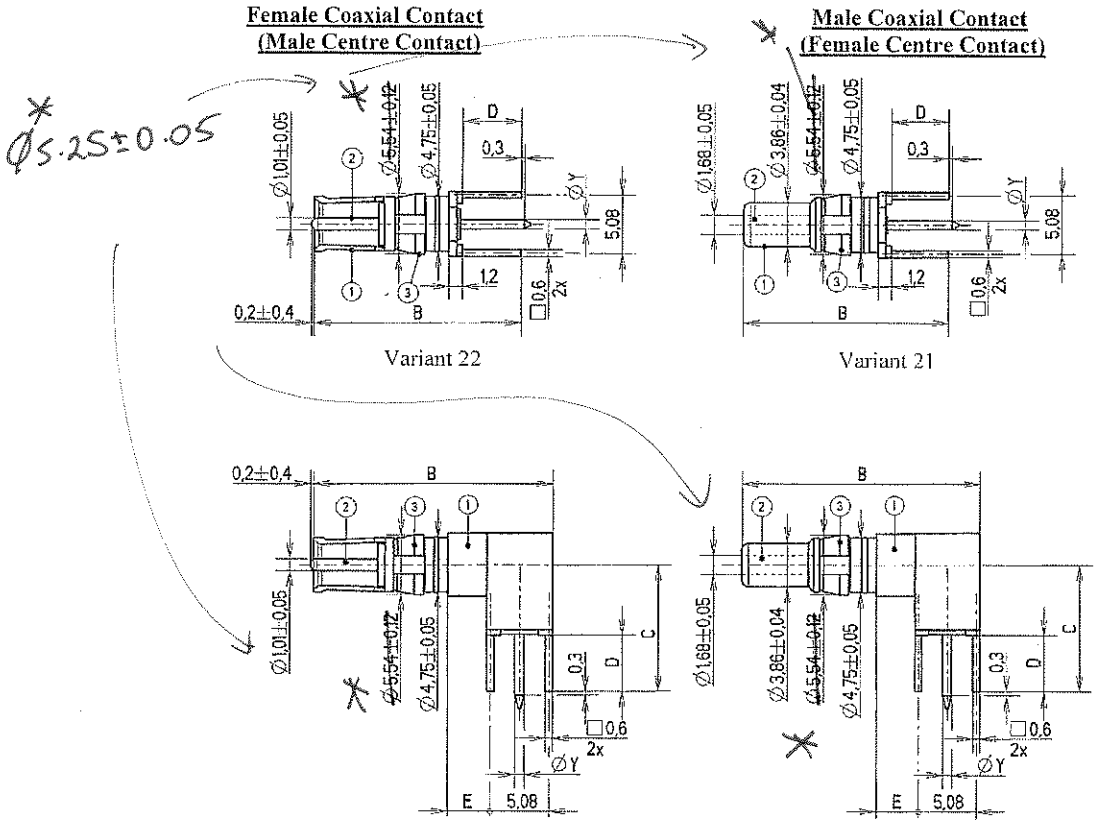

1. Outer contact.
2. Centre contact
3. Ring

Dimensions in millimetres. For lettered dimensions, see Table on Page ?

3401004
(5.25)

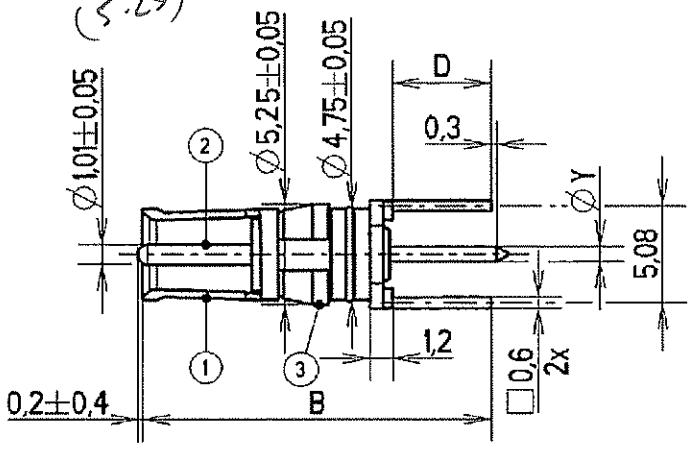
Ø1,01±0,05
Ø5,25±0,05
Ø4,75±0,05
D
0,3
ØY
5,08
1,2
□0,6
2x
0,2±0,4
B

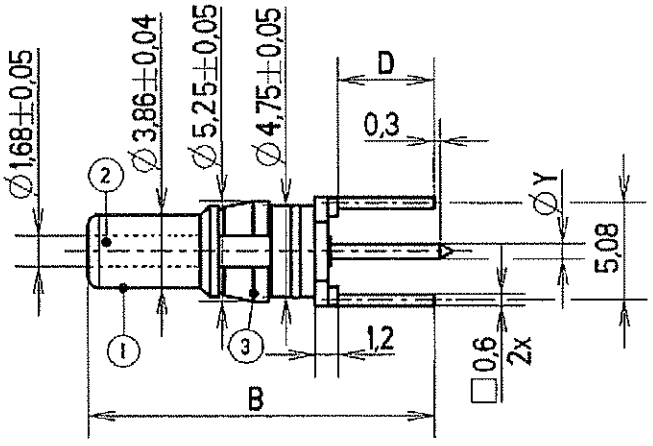
Ø1,68±0,05
Ø3,86±0,04
Ø5,25±0,05
Ø4,75±0,05
D
0,3
ØY
5,08
1,2
□0,6
2x
B

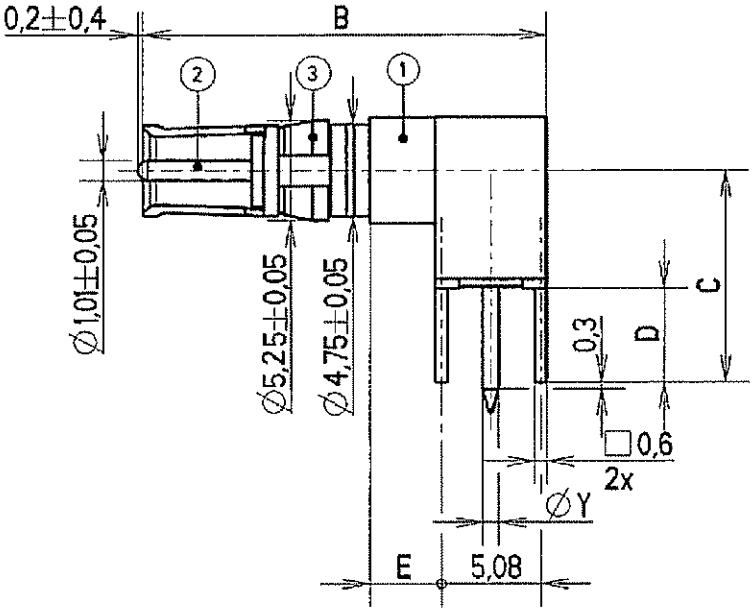
0,2±0,4
B
Ø1,01±0,05
Ø5,25±0,05
Ø4,75±0,05
0,3
D
C
□0,6
2x
ØY
E
5,08

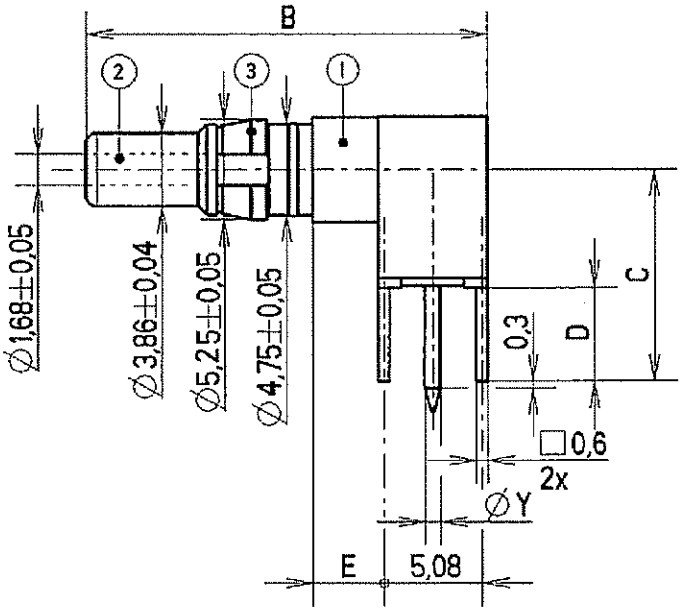
B
Ø1,68±0,05
Ø3,86±0,04
Ø5,25±0,05
Ø4,75±0,05
0,3
D
C
□0,6
2x
ØY
E
5,08

FIGURE 2 - PHYSICAL DIMENSIONS (CONTINUED)

replace by new figure attached.

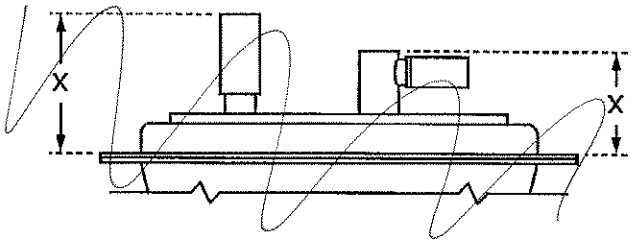

Maximum protrusion of contacts relative to rear of shell flange
See Page 11 for value of X.

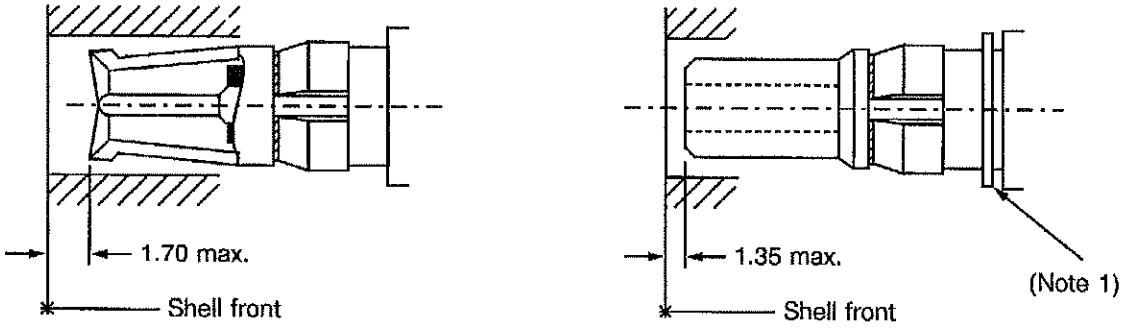

Maximum recess of contacts relative to front of shell

Dimensions in millimetres. For lettered dimensions, see table on Page 11.

NOTES:

1. The washer is optional (no change of the insert: the assembling dimension is compensated on the contact).

FIGURE 2 – PHYSICAL DIMENSIONS (CONTINUED)

Variants 1 to 20

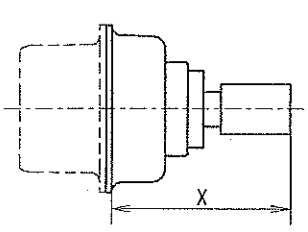

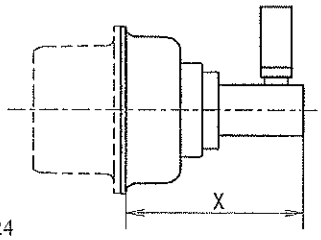

Variants 21 to 24

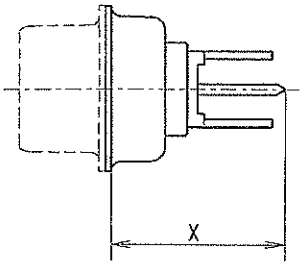

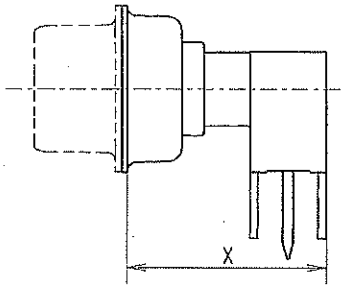

Maximum protrusion of contacts relative to rear of shell flange

See Page X for value of X. → page 12 ?

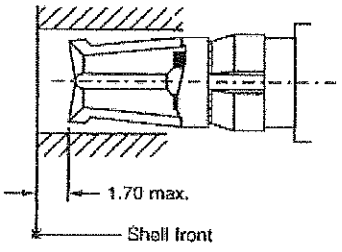

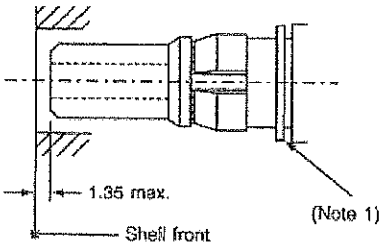

Maximum recess of contacts relative to front of shell

Dimensions in millimetres. For lettered dimensions, see table on Page X → page 12 ?

NOTES:

1. The washer is optional (no change of the insert; the assembling dimension is compensated on the contact).

FIGURE 2 - PHYSICAL DIMENSIONS (CONTINUED)

Dimensions in millimetres

VARIANTS	B Ref.	C Ref.	ØG Min.	ØH Min.	X Max.	ØY Max.
01, 11	23.60	-	0.90	2.30	18.80	3.25
02, 12	23.60	-	0.90	2.30	18.80	3.25
03, 13	18.64	12.50	0.90	2.30	13.46	3.25
04, 14	18.64	12.50	0.90	2.30	13.46	3.25
05, 15	23.60	-	1.55	3.10	18.80	4.10
06, 16	23.60	-	1.55	3.10	18.80	4.10
07, 17	18.64	12.50	1.55	3.10	13.46	4.10
08, 18	18.64	12.50	1.55	3.10	13.46	4.10
09, 19	26.30	-	2.55	5.10	21.50	6.20
10, 20	26.30	-	2.55	5.10	21.50	6.20

Add 21 to 24 see attached.

*

D, E Add Colums see attached.

FIGURE 2 – PHYSICAL DIMENSIONS (CONTINUED)

Dimensions in millimetres

VARIANTS	B Ref.	C Ref.	D Ref.	E Ref.	ø G Min.	ø H Min.	X Max.	ø Y Max.
01 , 11	23,60	-	-	-	0,90	2,30	18,80	3,25
02 , 12	23,60	-	-	-	0,90	2,30	18,80	3,25
03 , 13	18,64	12,50	-	-	0,90	2,30	13,46	3,25
04 , 14	18,64	12,50	-	-	0,90	2,30	13,46	3,25
05 , 15	23,60	-	-	-	1,55	3,10	18,80	4,10
06 , 16	23,60	-	-	-	1,55	3,10	18,80	4,10
07 , 17	18,64	12,50	-	-	1,55	3,10	13,46	4,10
08 , 18	18,64	12,50	-	-	1,55	3,10	13,46	4,10
09 , 19	26,30	-	-	-	2,55	5,10	21,50	6,20
10 , 20	26,30	-	-	-	2,55	5,10	21,50	6,20
21 , 22	17,90	-	5	-	-	-	13,00	0,90
23 , 24	20,70	11,20	5	3,7	-	-	15,00	0,90
25	20,20	-	-	-	-	-	-	-

2. APPLICABLE DOCUMENTS

The following documents form part of this specification and shall be read in conjunction with it:-

(a) ESCC Generic Specification No. 3401, Electrical Connectors, Circular and Rectangular.

(b) ESCC Detail Specification No. 3401/001, Connectors, Electrical, Rectangular, Miniature, Non-removable Solder and Wire-wrap Type Contacts and Removable Coaxial and Power Crimp-Type and Solder-Type Contacts, Based on Type D*M.

(c) ESCC Detail Specification No. 3401/002, Connectors, Electrical, Rectangular, Miniature, Removable Crimp-Type Contacts and Removable Coaxial and Power Crimp-Type and Solder-Type Contacts, Based on Type D*MA.

(d) ESCC Generic Specification No. 3402, Connectors, RF Coaxial.

(e) ESCC Basic Specification No. 20534, External Visual Inspection of Electrical Connectors.

(f) ESCC Detail Specification No. 3902/001, Coaxial Cables, Radio Frequency, Flexible, 50 Ohms, Miniature, PTFE Dielectric, Polyimide Jacket, Based on Type 50 CIS.

(g) MIL-G-45204, Gold Plating, Electro-deposited.

(h) MIL-C-14550, Copper Plating, Electro-deposited.

(i) MIL-C-17, General Specification for Cables, Radio Frequency, Flexible and Semi-rigid.

(j) NFC 93550, Câbles Coaxiaux, HF Sous Tresse Métallique: Prescriptions Générales.

3. TERMS, DEFINITIONS, ABBREVIATIONS, SYMBOLS AND UNITS

For the purpose of this specification, the terms, definitions, abbreviations, symbols and units specified in ESCC Basic Specification No. 21300 shall apply.

4. REQUIREMENTS

4.1 GENERAL

The complete requirements for procurement of the contacts specified herein shall be as stated in this specification and ESCC Generic Specification No. 3401. Deviations from the Generic Specification, applicable to this specification only, are listed in Para. 4.2.

Deviations from the applicable Generic Specification and this Detail Specification, formally agreed with specific Manufacturers on the basis that the alternative requirements are equivalent to the ESCC requirements and do not affect the components' reliability, are listed in the appendices attached to this specification.

4.2 DEVIATIONS FROM GENERIC SPECIFICATION

4.2.1 Deviations from Special In-process Controls

None.

4.2.2 Deviations from Final Production Tests (Chart II)

~~(a) Voltage Proof shall be measured as specified in Table 2.~~

None

4.2.3 Deviations from Burn-in and Electrical Measurements (Chart III)

Not applicable.

4.2.4 Deviations from Qualification, Environmental and Endurance Tests (Chart IV)

(a) Para. 9.~~21~~ 29, Oversize Pin Exclusion: Not applicable.

(b) Para. 9.~~24~~ 30, Probe Damage ~~Test~~: Not applicable.

(c) Para. 9.~~27~~ 31, Solderability: Not applicable ~~to~~ Variants ~~01~~ 11 to 20.

(d) Para. 9.29, Crimp Tensile Strength or Pull Test: Not applicable. Instead, a Cable Retention Force test shall be performed as specified in Para. 4.3.3.

~~(e) Voltage Proof shall be measured as and when specified in Table 6.~~

4.2.5 Deviations from Lot Acceptance Tests (Chart V)

~~Same deviations as listed in Para. 4.2.4 above are applicable.~~ (a) ditto Para. 9.29 etc
(b) ditto Para. 9.30 etc

4.3 MECHANICAL REQUIREMENTS

4.3.1 Dimension Check

The dimensions of the contacts specified herein shall be verified in accordance with the requirements set out in Para. 9.11 9.6 of ESCC Generic Specification No. 3401 and shall conform to those shown in Figure 2.

(Overall dimensions are specified with compatible inserts in ESCC Detail Specification No. 3401/001.

4.3.2 Weight

The maximum weight of the contacts specified herein shall be as specified in Table 1(a).

4.3.3 Cable Retention Force

(a) The contact shall be assembled to its test cable as specified in Table 1(a). It shall be firmly fixed and a movable sleeve or equivalent attached to the cable. The sleeve shall then be moved away from the fixed contact longitudinally and gradually, and in such a manner that the cable remains unbent and untwisted. A scale for measuring the retention force shall be attached to the sleeve. The force shall be maintained for 30 seconds minimum.

(b) The assembly, still under tension, shall be tested for contact resistance (inner and outer contacts) and shall then be examined for mechanical failure, loosening or rupture.

(c) With the contact still in the fixed position, the cable shall be held at a point 50 times the diameter of the cable from the contact and a torque shall be applied in both directions up to an angle of 90°.

(d) The cable shall then be bent at a radius of 10 times the diameter of the cable, starting at the contact, at an angle of 90 ± 5° from the axis of the contact, then reversed 180 ± 10°.

This procedure shall be repeated 4 times prior to retest and re-examination as specified in item (b) above.

4.3.4 Gold Plate Thickness

The thickness of the gold plate deposited on the contacts specified herein shall be 1.27 microns minimum of gold over 1.0 micron of copper.

~~4.3.5~~ ~~Contact Insertion and Withdrawal Forces~~ Engagement and Separation Forces

4.3.9 4.3.5.1 Outer Contacts (Variants 02, 04, 06, 08, 10, 12, 14, 16, 18, 20, 22, 24)

The ~~contact insertion~~ engagement and separation forces shall be as specified hereunder:-

Test Pin Diameter (mm)	Insertion (g)		Engagement (N)		Separation (N)	
	Min.	Max.	Min	Max	Min	Max
3.857 - 3.862	85	700	–	6.87	0.83	–

4.3.5.2 Centre Contacts (Variants 01, 03, 05, 07, 09, 11, 13, 15, 17, 19, 21, 23)

The ~~contact insertion and withdrawal~~ engagement and separation forces shall be as specified hereunder:-

Test Pin Diameter (mm)	Insertion (g)		Engagement (N)		Separation (N)	
	Min.	Max.	Min	Max	Min	Max
0.990 - 0.993	28.35	28.35	–	–	0.28	–
1.039 - 1.042	340.00	226.80	–	3.33	–	2.22

4.3.13 Joint Strength (Variants 01 to 20)

(a) The contact shall be assembled to its test cable as specified in Table 1(a).

(b) Testing shall be performed in accordance with ESCC Generic Specification No. 3401 Para. 9.15.5 with electrical continuity of the 2 contacts being maintained during testing. A force of ~~150~~ 40 N minimum shall be applied during testing.

(c) On completion of the testing Low level contact resistance shall be measured and shall not exceed the limits specified in Table 6 of this specification.

~~4.3.6~~ ~~Female~~ Contact Capability ~~(Variants 01, 03, 05, 07, 09, 11, 13, 15, 17, 19)~~

4.3.3 For the purpose of this test, the pick-up and drop weights shall be as follows:-

* 4.3.~~6~~3.1 Outer Contacts (Variants 02, 04, 06, 08, 10, 12, 14, 16, 18, 20~~)~~, 22, 24)

		Pick-up Weight	Drop Weight
Weight	(g)	85	700
Pin Diameter	(mm)	3.857 - 3.862	3.857 - 3.862
Insertion Depth	(mm)	4.0	4.0

* 4.3.~~6~~3.2 Centre Contacts (Variants 01, 03, 05, 07, 09, 11, 13, 15, 17, 19~~)~~, 21, 23)

		Pick-up Weight	Drop Weight
Weight	(g)	28.35	226.80
Pin Diameter	(mm)	0.990 - 0.993	1.039 - 1.042
Insertion Depth	(mm)	4.0	4.0

4.3.~~7~~10 Oversize Pin Exclusion

Not applicable.

4.3.~~8~~11 Probe Damage ~~Test~~

Not applicable.

4.3.4 ~~4.3.9~~ Contact Retention (In Insert)

Contact retention within the insert shall be 40.86N. There shall be no displacement of the contact in excess of 0.3mm.

4.4 MATERIALS AND FINISHES

The materials and finishes shall be as specified herein. Where a definite material is not specified, a material which will enable the contacts specified herein to meet the performance requirements of this specification shall be used. Acceptance or approval of any constituent material does not guarantee acceptance of the finished product.

in order.

4.3.8 Contact Insertion and Withdrawal forces

The contact insertion and withdrawal forces shall be ~~[illegible]~~ 65 N maximum.

4.3.5 Mating and Unmating forces

As specified in ESCC Detail Specification No. 3401/001

4.3.6 Insert Retention (In Shell)

As specified in ESCC Detail Specification No. 3401/001

4.3.7 Jackscrew Retention

Not applicable.

4.3.12 Solderability

~~[illegible]~~ Not applicable to Variants ~~[illegible]~~ 11 to 20. For all other Variants size A soldering iron shall be used ~~[illegible]~~

4.4.1 Inner and Outer Contacts

Gold plating thickness shall be 1·27μm minimum over 1μm minimum of copper

The contacts shall be made of copper base alloy selected from raw materials with a minimum of impurities. ~~The contacts shall be plated as specified in MIL-G-45204, Type II, Grade 'C', over copper in accordance with MIL-C-14550.~~

4.4.2 Insert

Teflon, unpigmented.

4.5 MARKING

4.5.1 General

The marking of all components delivered to this specification shall be in accordance with the requirements of ESCC Basic Specification No. 21700 and the following paragraphs. These components being too small to accommodate the marking as specified hereafter, the full marking information shall accompany each lot of components in its primary package. Such marking shall comprise:-

(a) The ESCC Component Number.

(b) Traceability Information.

(c) Quantity of Components.

4.5.2 The ESCC Component Number

The ESCC Component Number shall be constituted and marked as follows:

340100401B

Detail Specification Number

Type Variant, as applicable (see Table 1(a))

Testing Level

4.5.3 Traceability Information

Traceability information shall be marked in accordance with ESCC Basic Specification No. 21700.

4.4.3 Magnetism Level

As specified in ESCC Detail Specification No. 3401/001.

4.6 ELECTRICAL MEASUREMENTS

4.6.1 Electrical Measurements at Room Temperature

The parameters to be measured in respect of electrical characteristics are scheduled in Table 2. Unless otherwise specified, the measurements shall be performed at T_{amb} = +22 ± 3 °C.

Contact resistance shall be measured of both the engaged outer and inner conductor contacts.

4.6.2 Electrical Measurements at High and Low Temperatures (Table 3)

Not applicable.

4.6.3 Circuits for Electrical Measurements

Circuits for use in performing the electrical measurements shown in Table 2 of this specification are shown in Figure 3.

4.7 SCREENING TESTS (TABLES 4 AND 5)

Not applicable.

TABLE 2 - ELECTRICAL MEASUREMENTS AT ROOM TEMPERATURE

No.	CHARACTERISTICS	SYMBOL	ESCC GEN. SPEC. 3401	TEST CONDITIONS	LIMITS		UNIT
					MIN.	MAX.	
1	Contact Resistance Low Level Current Centre and Outer Contact	R_C	Para. ~~9.28.~~2 9.1.1.3	Figure 3	-	8.5	mΩ
2	Contact Resistance Rated Level Current Centre Contact	R_C	Para. ~~9.28.~~2 9.1.1.3	Figure 3	-	7.0	mΩ
3	Voltage Proof Centre/Outer Contact Straight Rear End	V_P	Para. ~~9.2~~ 9.1.1.2	-	-	1000	Vrms
4	Voltage Proof Centre/Outer Contact 90° Rear End	V_P	Para. ~~9.2~~ 9.1.1.2	-	-	800	Vrms

TABLES 3, 4 AND 5

Not applicable.

FIGURE 3 - TEST CIRCUIT FOR CONTACT RESISTANCE MEASUREMENT

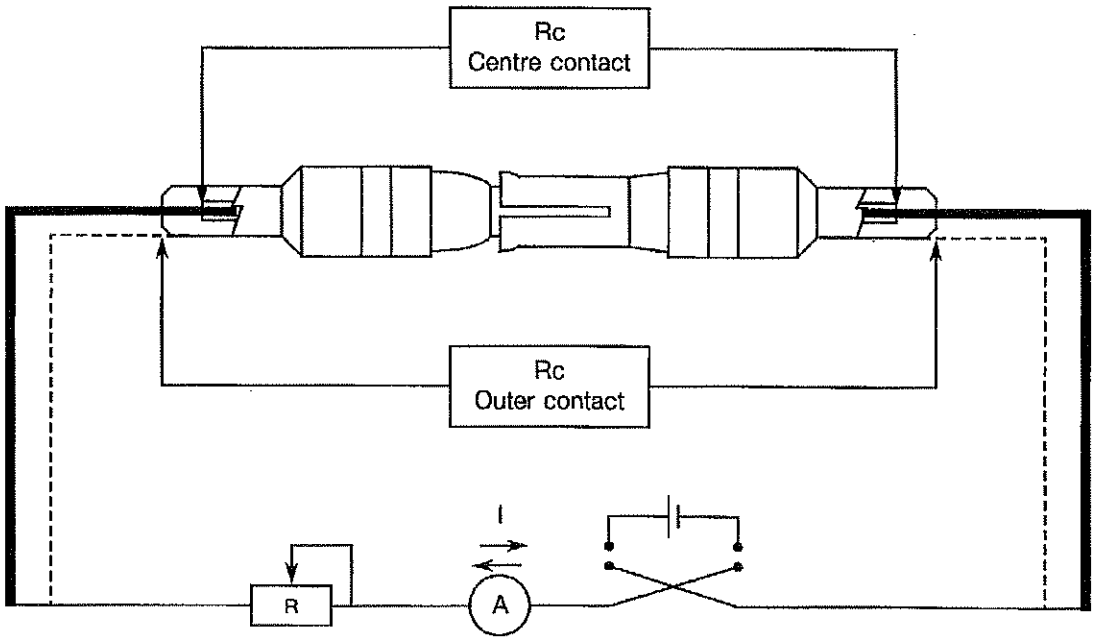

4.8 ENVIRONMENTAL AND ENDURANCE TESTS

4.8.1 Measurements and Inspections on Completion of Environmental Tests

The parameters to be measured on completion of environmental tests shall be those specified in the test sequence of ESCC Generic Specification No. 3401. Unless otherwise stated, the measurements shall be performed at T_{amb} = +22 ± 3 °C.

4.8.2 Measurements and Inspections at Intermediate Points during Endurance Tests

Not applicable.

4.8.3 Measurements and Inspections on Completion of Endurance Tests

The parameters to be measured on completion of endurance tests shall be those specified in the test sequence of ESCC Generic Specification No. 3401. Unless otherwise stated, the measurements shall be performed at T_{amb} = +22 ± 3 °C.

4.8.4 Conditions for Operating Life Tests (Part of Endurance Testing)

Not applicable.

4.8.5 Electrical Circuits for Operating Life Tests

Not applicable.

4.8.6 Conditions for High Temperature Storage Test (Part of Endurance Testing)

~~Not applicable.~~

The requirements for high temperature storage test are specified in Section 9 of ESCC Generic Specification No. 3601. ~~The conditions for~~ The conditions for high temperature storage testing shall be the maximum storage temperature specified in Table 1 (b) of this specification.

TABLE 6 - MEASUREMENTS AND INSPECTIONS ON COMPLETION OF ENVIRONMENTAL AND ENDURANCE TESTS

No.	ESCC GENERIC SPECIFICATION NO. 3401		MEASUREMENTS AND INSPECTIONS		SYMBOL	LIMITS		UNIT
	ENVIRONMENTAL AND ENDURANCE TESTS (1)	TEST METHOD AND CONDITIONS	IDENTIFICATION	CONDITIONS		MIN.	MAX.	
01	Female Contact Capability	Para. 9.6	Pick-up Weight Drop Weight	Para. 4.3.6 Para. 4.3.6	- -	Pick-up Drop		- -
02	Oversize Pin Exclusion	Para. 9.21	Not applicable	-	-	-	-	-
03	Gold Plate Thickness	Para. 9.22	Gold Plate Thickness	Para. 4.3.4	-	-	-	-
04	Gold Plate Porosity	Para. 9.23	Visual Examination	Within 15 seconds	-	No bubbles		-
05	Contact Insertion and Withdrawal Forces	Para. 9.25	Forces	Para. 4.3.5	-	Para. 4.3.5		-
06	Probe Damage Test	Para. 9.24	Not applicable	-	-	-	-	-
07	Crimp Visual Inspection	Para. 9.26	Visual Examination	-	-	-	-	-
08	Solderability	Para. 9.27	Not applicable	-	-	-	-	-
09	Contact Resistance	Para. 9.28	Contact Resistance	Centre & Outer Contacts: Low Level Table 2 Item 1 Centre Contact: Rated Level Table 2 Item 2	 R_C R_C	 Table 2 Item 1 Table 2 Item 2		 - -
10	Crimp Tensile Strength	Para. 9.29	Not applicable	-	-	-	-	-
11	Pull Test	Para. 9.29	Not applicable	-	-	-	-	-
12	Endurance	Para. 9.15	Centre & Outer Contacts Contact Resistance Drift Contact Resistance Voltage Proof	 Low Level Table 2 Item 1 Low Level Table 2 Item 1 Table 2 Items 3 & 4	 ΔR_C R_C V_P	 - - Table 2 Items 3 & 4	 2.0 8.5	 mΩ mΩ
13	High Temperature Storage	Para. 9.19	Centre & Outer Contacts Contact Resistance Drift Contact Resistance Voltage Proof	 Low Level Table 2 Item 1 Low Level Table 2 Item 1 Table 2 Items 3 & 4	 ΔR_C R_C V_P	 - - Table 2 Items 3 & 4	 2.0 8.5	 mΩ mΩ
14	Cable Retention Force	Para. 4.3.3 of this spec.	Contact Resistance Drift Visual Examination	Low Level Table 2 Item 1 -	ΔR_C -	No drift -	 -	- -
15	Voltage Proof Altitude	Para. 9.12 33000M	Voltage Proof	Table 2 Items 3 & 4	V_P	See Figure 1		-

NOTES

1. The tests in this table refer to either Chart IV or V and shall be used as applicable.

3401/004 Table 6

No.	ESCC Gen. Spec. No. 3401		Measurements and Inspections		Symbol	Limits		Unit
	Environmental and Endurance Tests (1)	Test Method and Conditions	Identification	Conditions		Min.	Max.	
1	Wiring	Para. 9.10	Visual Examination	-	-	-	-	-
			Contact Resistance - Centre & Outer Contacts	Low Level, Table 2 Item 1	R_C	-	8.5	mΩ
2	Vibration	Para. 9.11	ESCC 3401/001	-	-	-	-	-
3	Shock or Bump	Para. 9.12	ESCC 3401/001	-	-	-	-	-
4	Climatic Sequence	Para. 9.13	**Low Air Pressure:** Voltage Proof at Simulated Altitude	Table 2 Items 3 & 4 at 33000m	V_P	See Figure 1		-
			Final Inspection: Visual Examination	-	-	-	-	-
			Final Measurement: Voltage Proof	Table 2 Items 3 & 4	V_P	See Figure 1		-
5	Seal Test	Para. 9.9	Not Applicable	-	-	-	-	-
6	Plating Thickness	Para. 9.14 and Para. 4.4.1 of this Spec.	Thickness	Para. 4.4.1	-	Para. 4.4.1		-
7	Joint Strength	Para. 9.15.5 and Para. 4.3.13 of this Spec. Force: ??N min	Visual Examination	-	-	-	-	-
			Contact Resistance - Centre & Outer Contacts	Low Level, Table 2 Item 1	R_C	-	8.5	mΩ
8	Rapid Change of Temperature	Para. 9.16	**Final Inspection:** Visual Examination	-	-	-	-	-
			Final Measurement: Voltage Proof	Table 2 Items 3 & 4	V_P	See Figure 1		-
9	Contact Retention (In Insert)	Para. 9.17 and Para. 4.3.4 of this Spec. Force: 40.86N	Contact Displacement	Para. 4.3.4	-	Para. 4.3.4		-
10	Endurance	Para. 9.18	**Initial Measurement:** Contact Resistance - Centre & Outer Contacts	Low Level, Table 2 Item 1	R_C	-	8.5	mΩ
			Final Inspection: Visual Examination	-	-	-	-	-
			Final Measurement: Contact Resistance Drift	Low Level, Table 2 Item 1	ΔR_C	-	2	mΩ
			Final Measurement: Voltage Proof	Table 2 Items 3 & 4	V_P	See Figure 1		-
11	Permanence of Marking	Para. 9.19	As Applicable	-	-	-	-	-
12	Mating/Unmating Forces	Para. 9.20	ESCC 3401/001	-	-	-	-	-

13	High Temperature Storage	Para. 9.21	**Initial Measurement:** Contact Resistance - Centre & Outer Contacts	Low Level, Table 2 Item 1	R_C	-	8.5	mΩ
			Final Inspection: Visual Examination	-	-	-	-	-
			Final Measurement: Contact Resistance Drift	Low Level, Table 2 Item 1	ΔR_C	-	2	mΩ
			Final Measurement: Contact Resistance - Centre Contact	Rated, Table 2 Item 2	R_C	-	7	mΩ
			Final Measurement: Voltage Proof	Table 2 Items 3 & 4	V_P	See Figure 1		-
			Final Measurement: Contact Retention (In Insert)	Para. 4.3.4	-	Para. 4.3.4		-
14	Corrosion	Para. 9.22	ESCC 3401/001	-	-	-	-	-
15	Insert Retention (In Shell)	Para. 9.23	ESCC 3401/001	-	-	-	-	-
16	Jackscrew Retention	Para. 9.24	Not Applicable	-	-	-	-	-
17	High Temperature Measurements	Para. 9.25	ESCC 3401/001	-	-	-	-	-
18	Overload Test	Para. 9.26	**Final Measurement:** Contact Resistance - Centre Contact	Rated, Table 2 Item 2	R_C	-	7	mΩ
			Final Measurement: Voltage Proof	Table 2 Items 3 & 4	V_P	See Figure 1		-
19	Maintenance Aging	Para. 9.27	**Final Measurement:** Contact Retention (In Insert)	Para. 4.3.4	-	Para. 4.3.4		-
			Final Measurement: Contact Insertion & Withdrawal Forces	Para. 4.3.8	-	Para. 4.3.8		-
20	Engagement and Seperation Forces	Para. 9.28 and Para. 4.3.9 of this Spec.	Engagement and Seperation Forces	Para. 4.3.9	-	Para. 4.3.9		-
21	Oversize Pin Exclusion	Para. 9.29	Not Applicable	-	-	-	-	-
22	Probe Damage	Para. 9.30	Not Applicable	-	-	-	-	-
23	Solderability	Para. 9.31 and Para. 4.3.12 of this Spec.	Visual Examination	-	-	-	-	-

FIGURE 2(a) – PHYSICAL DIMENSIONS (CONTINUED)

Female Coaxial Contact (Male Centre Contact)

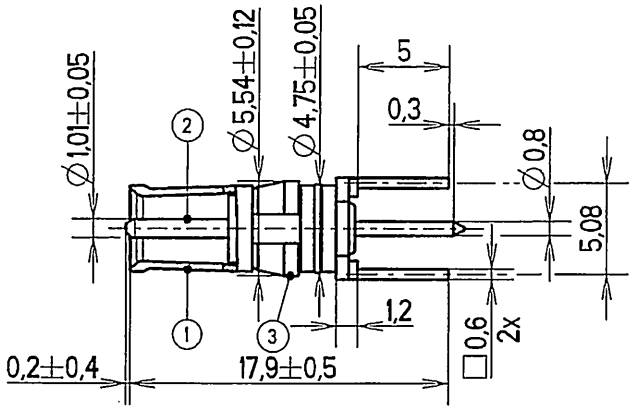

Variant 22

Male Coaxial Contact (Female Centre Contact)

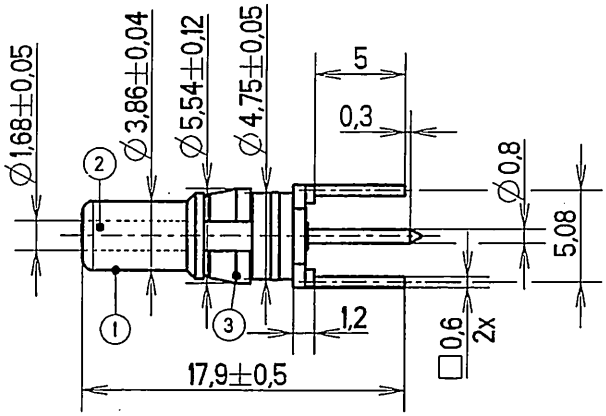

Variant 21

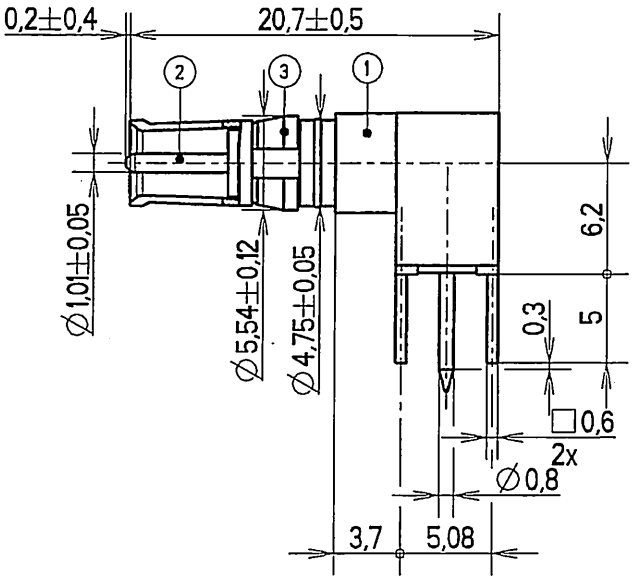

Variant 24

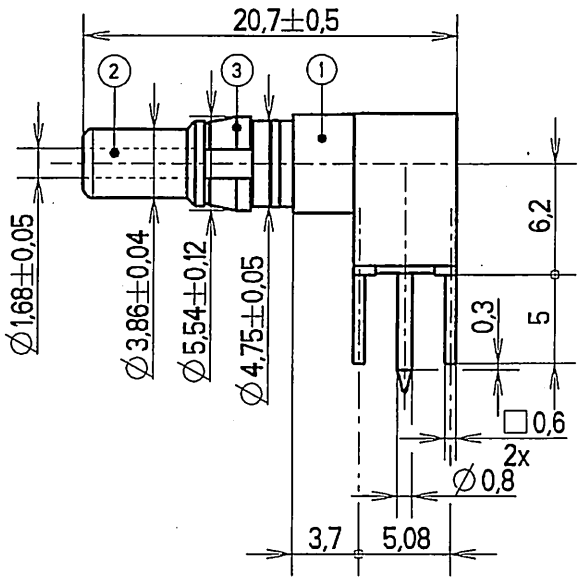

Variant 23

1. Outer contact.
2. Centre contact
3. Ring

Dimensions in millimetres

DRAFT