DOCUMENT CHANGE REQUEST

DCR number 373	Changes required for: General	Originator: S Jeffery
Date: 2007/08/10	Date sent: 2007/08/10	Organisation: ESA/ESTEC
Status: IMPLEMENTED		

Title:	Transistors High Power NPN, based on types 2N5664 through 2N5667		
Number:	5203/038	Issue:	1

Other documents affected:

Page:

Total re-write.

Paragraph:

Total re-write.

Original wording:

Proposed wording:

Total reformat of this specification as part of the ongoing conversion to the ESCC format. See below for summary of changes and attached Issue 2 Draft A of the specification.

Note: Known support for active procurement against this specification includes the following manufacturers:

SEMELAB/UK (not ESCC qualified but are currently willing to support the procurement of Variants 01, 02, 03, 04, 05, 06, 09, 10 and 11).

Summary of changes to the current format, layout and content is as follows:

1. Rewording and restructuring of various sections and paragraphs of the specification, plus other editorial changes based on the layout and editorial content of other Detail Specifications already converted to ESCC format.

2. Deletion of redundant paragraphs and information such as Mechanical Requirements.

3. Para. 1.7 High Temperature Test Precautions requirements moved to be a note (Note 2) to the Maximum Ratings table.

4. Deletion of obsolete Variants 07, 08 and 12 from the available range (not supported by Semelab).

5. Maximum Ratings table: Remark "Over Top" added for Collector-Base, Collector-Emitter and Emitter-Base voltages.

6. Maximum Ratings table: Remark "Continuous" added for Base Current.

DCR number 373	Changes required for: General	Originator: S Jeffery
Date: 2007/08/10	Date sent: 2007/08/10	Organisation: ESA/ESTEC
Status: IMPLEMENTED		

7. Figure 1(a) Parameter Derating Information moved to be a note to the Maximum Ratings table ("Note 1" amended).

8. Figures 1(b) and 1(c), Forward Bias Safe Operating Area, amended and moved to be a note (Note 3) to the Maximum Ratings table.

9. Para. 4.3.2 Weight requirements moved to Component Type Variants table. Maximum weight limits amended to 6.4 grammes for the TO-66 package and 1.2 grammes for the TO-5 and TO-39 packages.

10. Figure 2 re-named "Physical Dimensions and Terminal Identification"; Figures 2(a), 2(b) and 2(c) amended (standardisation of the TO-66, TO-5 and TO-39 packages) and Consolidated Notes added.

11. Figure 3, Fuctional Diagram: Figure 3(a) deleted (no longer required because the TO-66 package and terminal identification has been revised).

12. Para. 4.2 Deviations from Generic Specification: Deviations revised/re-written per the latest ESCC Generic Specification.

13. Para. 4.3.3 Terminal Strength: Erroneous text "Applied Force: 5.0±0.1 Newtons, 3 bends at 45°" deleted.

14. Para. 4.4.1 Case requirements corrected to reflect the TO-66 metal flange mount package and the TO-5 and TO-39 metal can packages.

15. Para. 4.4.2 Lead Material and Finish replaced by a reference to the Component Type Variants Para.

16. Para. 4.5.1 Required part marking corrected: Lead Identification deleted (not applicable to "TO-" packages) and ESCC qualified components symbol added.

17. Delete requirement for marking of the test level letter from the ESCC Component Number as per latest ESCC No. 21700.

18. Room Temperature Electrical Measurements, Parameter Drift Values and Intermediate and End-point Electrical Measurements: Ambient test temperature changed from +25±3°C to +22±3°C.

19. Para. 4.7.6, Verification of Safe Operating Area, revised.

20. Table 2, Characteristic "Emitter-Base Breakdown Voltage": reference to Note 1 added; Unit corrected to V (was µA).

21. Table 2, Characteristics "Collector-Base Cut-off Current 1" and "Collector-Base Cut-off Current 2" combined and re-named "Collector-Base Cut-off Current".

22. Table 2, Characteristics "d.c. Forward Current Transfer Ratio 1", "d.c. Forward Current Transfer Ratio 2", "d.c. Forward Current Transfer Ratio 3" and "d.c. Forward Current Transfer Ratio 4" combined and re-named "Forward-Current Transfer Ratio".

DOCUMENT CHANGE REQUEST

DCR number 373	Changes required for: General	Originator: S Jeffery
Date: 2007/08/10	Date sent: 2007/08/10	Organisation: ESA/ESTEC
Status: IMPLEMENTED		

23. Table 2, Characteristics "Collector-Emitter Saturation Voltage 1" and "Collector-Emitter Saturation Voltage 2" combined and re-named "Collector-Emitter Saturation Voltage".

24. Table 2, Characteristics "Base-Emitter Saturation Voltage 1" and "Base-Emitter Saturation Voltage 2" combined and re-named "Base-Emitter Saturation Voltage".

25. Table 2, Characteristic "Gain Bandwidth Product" re-named "Magnitude of Common-Emitter Small-Signal Short-Circuit Forward-Current Transfer Ratio"; Symbol Corrected to "|hfe|" (was fT); Unit corrected to "-" (was MHz).

26. Table 2, Characteristics "Turn-on Time" and "Turn-off Time" revised (Test Method 3251 reference added, Test Condition "VCC = 100V" deleted and new Test Conditions added).

27. Table 2: Replace LTPD7 sampling for AC parameters tests (designated by "Note 3") with an equivalent fixed sample of 32 components with 0 failures (or 100%).

28. Figures 4(a) and 4(b) amended and combined (and Voltage Waveforms added) and moved to be a note (Note 4) to Room Temperature Electrical Measurements.

29. Table 3, Characteristic "d.c. Forward Current Transfer Ratio 2" re-named "Forward-Current Transfer Ratio 2".

30. Table 3 (High and Low Temperature Electrical Measurements): 100% inspection has been replaced by a sample of 5 components with 0 failures, or 100%, in line with the new Generic 5000 Issue 3.

31. Table 4: Absolute limits have been added for information.

32. Table 4, Characteristic "d.c. Forward Current Transfer Ratio 2" re-named "Forward-Current Transfer Ratio 2".

33. Tables 2, 3 and 4 - Test Conditions column: addition of Test, or Bias, Conditions for referenced MIL-STD-750 Test Methods as and where applicable.

34. Table 5(b), Tamb Condition changed from +25±3°C to +22±3°C.

35. Table 6, Characteristic "d.c. Forward Transfer Ratio 2" re-named "Forward-Current Transfer Ratio 2".

36. Appendix A deleted (redundant information as manufacturers Unitrode and Solitron no longer manufacture these part types to this specification).

Justification:

(see also change details for each item above)

1. Part of the ongoing activity of conversion of cover-sheeted ESA/SCC Specifications to the ESCC format.

DOCUMENT CHANGE REQUEST

DCR number 373	Changes required for: General	Originator: S Jeffery
Date: 2007/08/10	Date sent: 2007/08/10	Organisation: ESA/ESTEC
Status: IMPLEMENTED		

2. To make the format and presentation consistent with the various other ESCC Detail Specifications already converted to ESCC format.

3. To make the content consistent with ESCC Generic Specification No. 5000 Issue 3.

4. To update the current product availability by the manufacturer(s), and consequently remove any obsolete Variants.

5. To make corrections to technical errors in the previous issue.

6. Standardisation of the TO-66, TO-5 and TO-39 packages in all applicable ESCC Detail Specifications.

Attachments:

5203038_Issue_2_-_Draft_A.pdf, null

Modifications:

N/A

Approval signature:

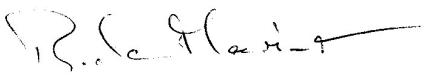

Date signed:

2007-08-10

Pages 1 to 20

TRANSISTORS, HIGH POWER, NPN

BASED ON TYPE 2N5664, 2N5665, 2N5666 AND 2N5667

ESCC Detail Specification No. 5203/038

Issue 2 - Draft A	August 2007

Document Custodian: European Space Agency - see https://escies.org

LEGAL DISCLAIMER AND COPYRIGHT

European Space Agency, Copyright © 2007. All rights reserved.
The European Space Agency disclaims any liability or responsibility, to any person or entity, with respect to any loss or damage caused, or alleged to be caused, directly or indirectly by the use and application of this ESCC publication.
This publication, without the prior permission of the European Space Agency and provided that it is not used for a commercial purpose, may be:
– copied in whole, in any medium, without alteration or modification.
– copied in part, in any medium, provided that the ESCC document identification, comprising the ESCC symbol, document number and document issue, is removed.

DOCUMENTATION CHANGE NOTICE

(Refer to https://escies.org for ESCC DCR content)

DCR No.	CHANGE DESCRIPTION
TBD	Specification up issued to incorporate editorial and technical changes per DCR.

TABLE OF CONTENTS

1.	**GENERAL**	**5**
1.1	Scope	5
1.2	Applicable Documents	5
1.3	Terms, Definitions, Abbreviations, Symbols and Units	5
1.4	The ESCC Component Number and Component Type Variants	5
1.4.1	The ESCC Component Number	5
1.4.2	Component Type Variants	5
1.5	Maximum Ratings	6
1.6	Physical Dimensions and Terminal Identification	9
1.6.1	Metal Flange Mount Package (TO-66) - 2 lead	10
1.6.2	Metal Can Package (TO-5) - 3 lead	11
1.6.3	Metal Can Package (TO-39) - 3 lead	12
1.6.4	Notes to Physical Dimensions and Terminal Identification	12
1.7	Functional Diagram	13
1.8	Materials and Finishes	13
2.	**REQUIREMENTS**	**13**
2.1	General	13
2.1.1	Deviations from the Generic Specification	14
2.1.1.1	Deviation from Screening Tests - Chart F3	14
2.2	Marking	14
2.3	Terminal Strength	14
2.4	Verification of Safe Operating Area	14
2.4.1	Safe Operating Area, Continuous DC, Variants 01 to 04	14
2.4.2	Safe Operating Area, Continuous DC, Variants 05, 06, 09, 10 and 11	14
2.4.3	Safe Operating Area, Switching Between Saturation and Cut-off with Clamped Inductive Load	15
2.5	Electrical Measurements at Room, High and Low Temperatures	15
2.5.1	Room Temperature Electrical Measurements	15
2.5.2	High and Low Temperatures Electrical Measurements	18
2.6	Parameter Drift Values	19
2.7	Intermediate and End-Point Electrical Measurements	19
2.8	Power Burn-in Conditions	20
2.9	Operating Life Conditions	20

1. GENERAL

1.1 SCOPE

This specification details the ratings, physical and electrical characteristics and test and inspection data for the component type variants and/or the range of components specified below. It supplements the requirements of, and shall be read in conjunction with, the ESCC Generic Specification listed under Applicable Documents.

1.2 APPLICABLE DOCUMENTS

The following documents form part of this specification and shall be read in conjunction with it:

(a) ESCC Generic Specification No. 5000

(b) MIL-STD-750, Test Methods and Procedures for Semiconductor Devices

1.3 TERMS, DEFINITIONS, ABBREVIATIONS, SYMBOLS AND UNITS

For the purpose of this specification, the terms, definitions, abbreviations, symbols and units specified in ESCC Basic Specification No. 21300 shall apply.

1.4 THE ESCC COMPONENT NUMBER AND COMPONENT TYPE VARIANTS

1.4.1 The ESCC Component Number

The ESCC Component Number shall be constituted as follows:

Example: 520303801

- Detail Specification Reference: 5203038
- Component Type Variant Number: 01 (as required)

1.4.2 Component Type Variants

The component type variants applicable to this specification are as follows:

Variant Number	Based on Type	Case	Lead/Terminal Material and Finish	Weight max g
01	2N5664	TO-66	D2	6.4
02	2N5664	TO-66	D3 or D4	6.4
03	2N5665	TO-66	D2	6.4
04	2N5665	TO-66	D3 or D4	6.4
05	2N5666	TO-5	D2	1.2
06	2N5666	TO-5	D3 or D4	1.2
09	2N5666	TO-39	D2	1.2
10	2N5666	TO-39	D3 or D4	1.2
11	2N5667	TO-39	D2	1.2

The lead/terminal material and finish shall be in accordance with the requirements of ESCC Basic Specification No. 23500.

1.5 MAXIMUM RATINGS

The maximum ratings shall not be exceeded at any time during use or storage.
Maximum ratings shall only be exceeded during testing to the extent specified in this specification and when stipulated in Test Methods and Procedures of the ESCC Generic Specification.

Characteristics	Symbols	Maximum Ratings	Unit	Remarks
Collector-Base Voltage Variants 01, 02, 05, 06, 09, 10 Variants 03, 04, 11	V_{CBO}	 250 400	V	Over T_{op}
Collector-Emitter Voltage Variants 01, 02, 05, 06, 09, 10 Variants 03, 04, 11	V_{CEO}	 200 300	V	Over T_{op} Note 3
Emitter-Base Voltage	V_{EBO}	6	V	Over T_{op}
Collector Current	I_C	5	A	Continuous Note 3
Base Current	I_B	1	A	Continuous
Power Dissipation For TO-66 For TO-5 and TO-39	P_{tot}	 30 15	W	At $T_{case} \leq$ +100°C Note 1
Operating Temperature Range	T_{op}	-65 to +200	°C	Note 2
Storage Temperature Range	T_{stg}	-65 to +200	°C	Note 2
Soldering Temperature	T_{sol}	+260	°C	Note 4
Thermal Resistance Junction to Case For TO-66 For TO-5 and TO-39	$R_{th(j-c)}$	 3.3 6.7	°C/W	

NOTES:

1. For T_{case} > +100°C, derate linearly to 0W at +200°C.
2. For Variants with tin-lead plating or hot solder dip lead finish all testing performed at T_{amb} > +125°C

shall be carried out in a 100% inert atmosphere.

3. Safe Operating Area applies as follows:

Maximum Safe Operating Area Graph (Continuous DC) for Variants 01 to 04

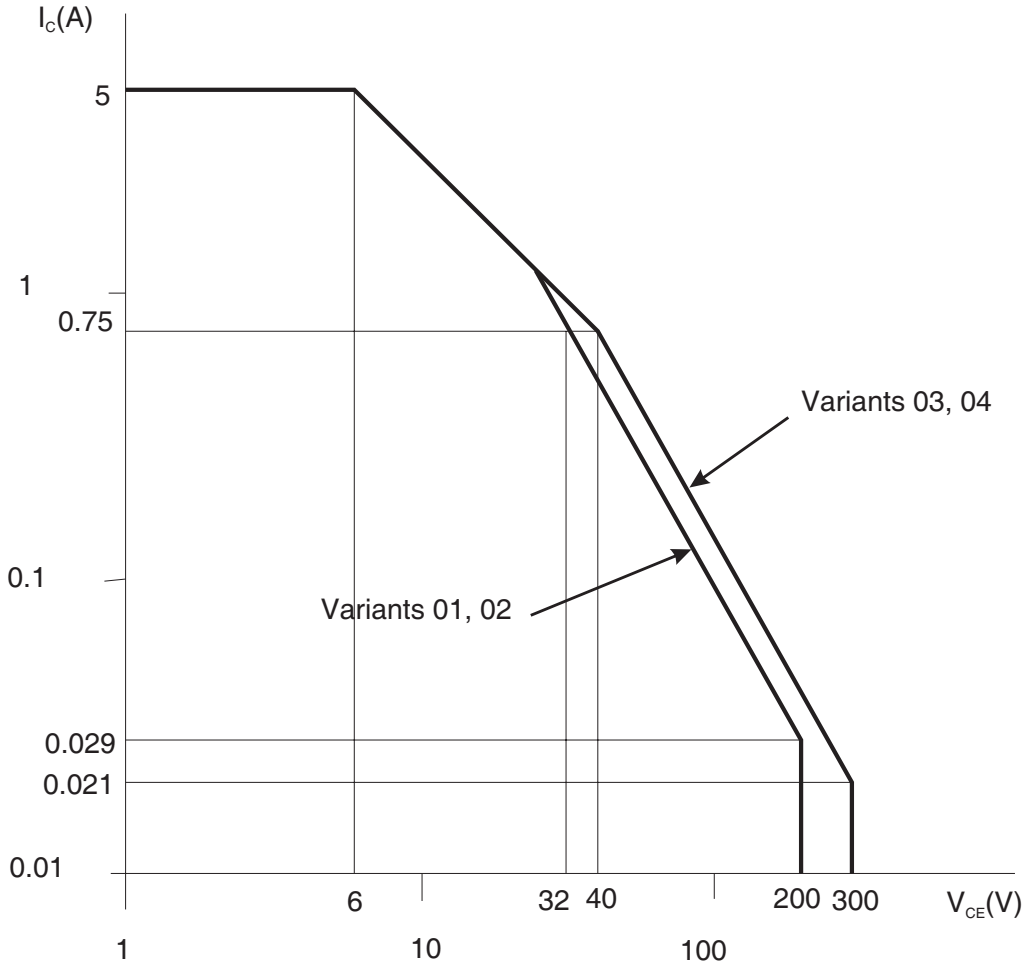

Maximum Safe Operating Area Graph (Continuous DC) for Variants 05, 06, 09, 10 and 11

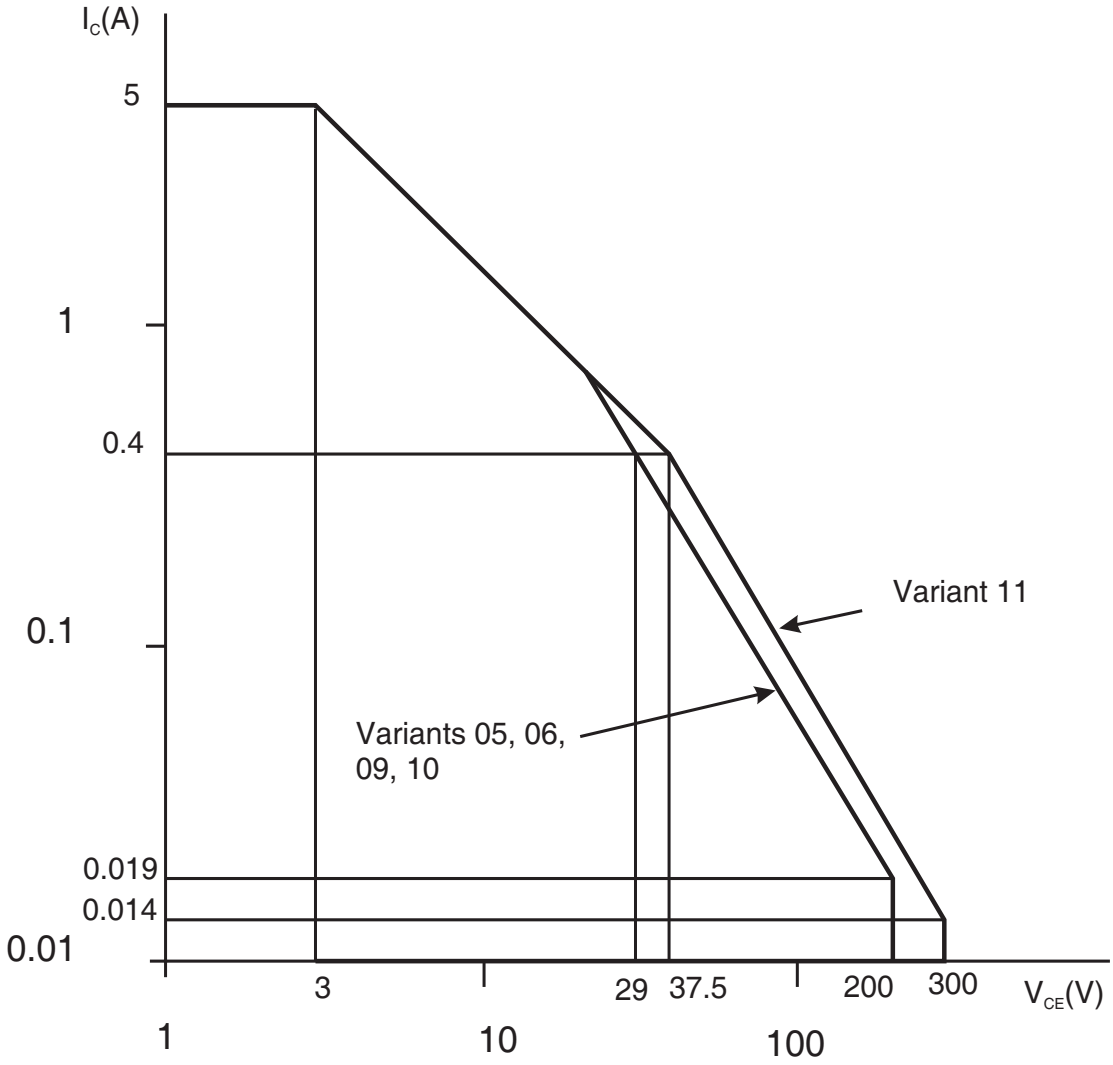

Maximum Safe Operating Area Graph (Switching Between Saturation and Cut-off with Clamped Inductive Load)

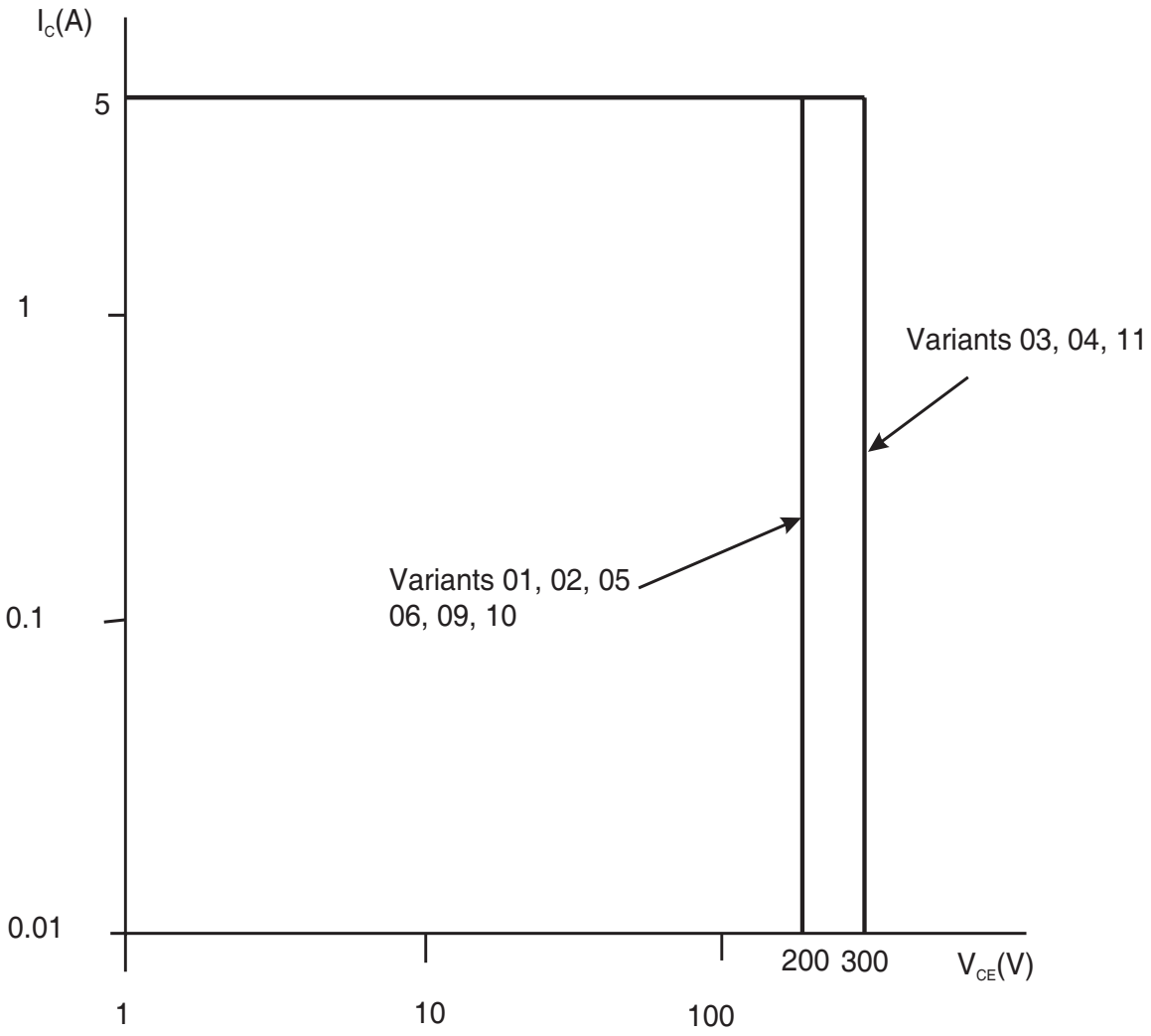

4. Duration 10 seconds maximum at a distance of not less than 1.5mm from the device body and the same lead shall not be resoldered until 3 minutes have elapsed.

1.6 PHYSICAL DIMENSIONS AND TERMINAL IDENTIFICATION

Consolidated notes are given following the case drawings and dimensions.

1.6.1 Metal Flange Mount Package (TO-66) - 2 lead

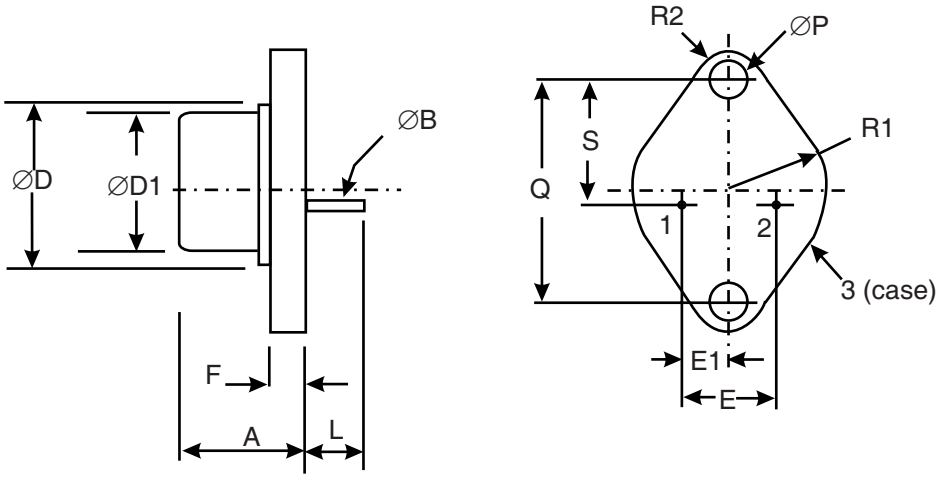

Symbols	Dimensions mm		Notes
	Min	Max	
A	6.35	8.64	
ØB	0.71	0.86	2
ØD	-	15.74	
ØD1	11.94	12.7	
E	4.83	5.34	
E1	2.36	2.72	
F	1.27	1.91	
L	9.14	-	
ØP	3.61	3.86	3
Q	24.33	24.43	
R1	-	8.89	4
R2	2.92	3.68	4
S	14.48	14.99	

1.6.2 Metal Can Package (TO-5) - 3 lead

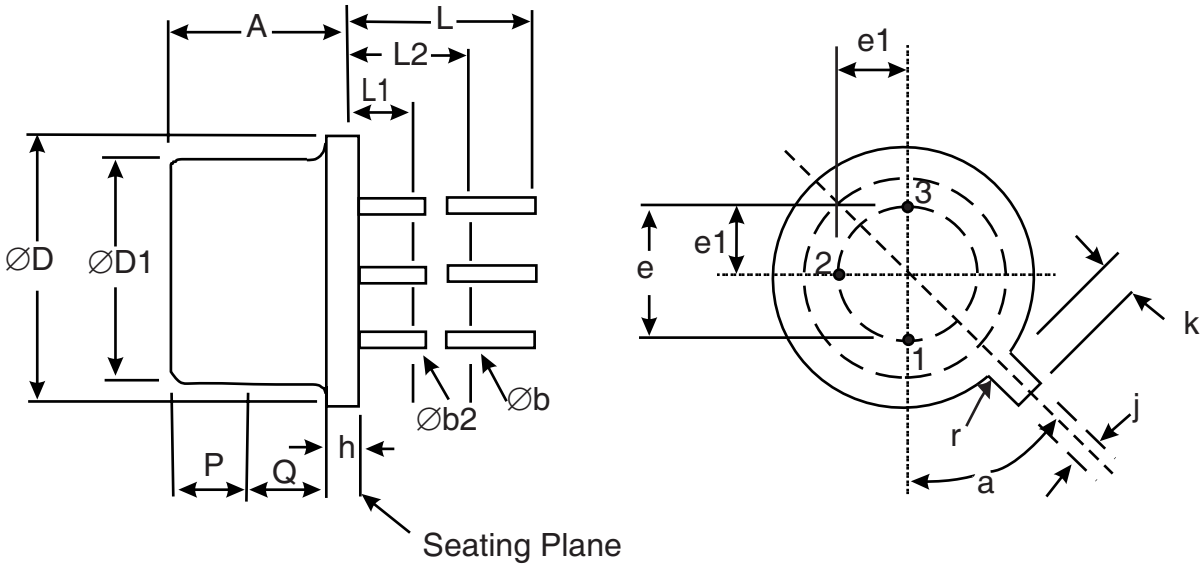

Symbols	Dimensions mm		Notes
	Min	Max	
A	6.1	6.6	
Øb	0.406	0.533	2, 5
Øb2	0.406	0.483	2, 5
ØD	8.51	9.4	
ØD1	7.75	8.51	
e	5.08 BSC		9
e1	2.54 BSC		
h	0.229	3.18	
j	0.711	0.864	
k	0.737	1.14	7
L	38.1	-	2
L1	-	1.27	2, 5
L2	6.35	-	2, 5
P	2.54	-	8
Q	-	-	10
r	-	0.179	11
a	45° BSC		1, 11

1.6.3 Metal Can Package (TO-39) - 3 lead

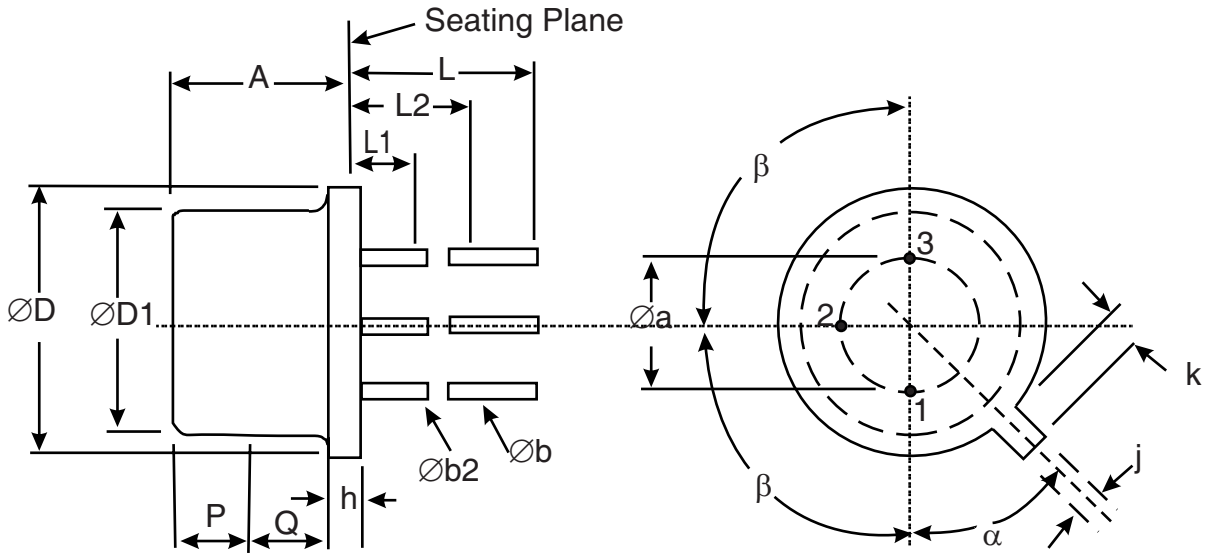

Symbols	Dimensions mm		Notes
	Min	Max	
Øa	4.83	5.35	
A	6	6.6	
Øb	0.4	0.533	2, 6
Øb2	0.4	0.483	2, 6
ØD	8.31	9.4	
ØD1	7.75	8.51	8
h	0.229	3.18	
j	0.711	0.864	
k	0.737	1.14	7
L	12.7	19	2
L1	-	1.27	2, 6
L2	6.35	-	2, 6
P	2.54	-	8
Q	-	-	10
α	45° BSC		11
β	90° BSC		1

1.6.4 Notes to Physical Dimensions and Terminal Identification

1. Terminal identification is specified by the component's geometry where Lead 1 = emitter, Lead 2 = base and Lead 3 (TO-5, TO-39) or Case (TO-66) = collector.

2. Applies to all leads.
3. Applies to both mounting holes.
4. Radius from mounting hole centre.
5. Øb2 applies between L1 and L2. Øb applies between L2 and 38.1mm from the seating plane. Diameter is uncontrolled within L1 and beyond 38.1mm from the seating plane.
6. Øb2 applies between L1 and L2. Øb applies between L2 and 12.7mm from the seating plane. Diameter is uncontrolled within L1 and beyond 38.1mm from the seating plane.
7. Measured from the maximum diameter of the actual device.
8. This zone is controlled for automatic handling. The variation in actual diameter within this zone shall not exceed 0.254mm.
9. Leads having maximum diameter 0.483mm measured in the gauging plane 1.37 (+0.025, -0)mm below the seating plane of the device shall be within 0.178mm of their true position relative to a maximum -width-tab.
10. The details of outline in this zone are optional.
11. Measured from the tab centreline.

1.7 FUNCTIONAL DIAGRAM

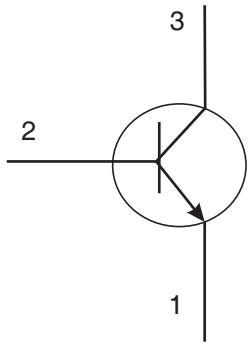

1. Emitter.
2. Base.
3. Collector.

NOTES:
1. The collector is internally connected to the case.

1.8 MATERIALS AND FINISHES

Materials and finishes shall be as follows:

a) Case
The case shall be hermetically sealed and have a metal body with hard glass seals.

b) Leads/Terminals
As specified in Component Type Variants.

2. REQUIREMENTS

2.1 GENERAL

The complete requirements for procurement of the components specified herein are as stated in this specification and the ESCC Generic Specification. Permitted deviations from the Generic Specification, applicable to this specification only, are listed below.

Permitted deviations from the Generic Specification and this Detail Specification, formally agreed with specific Manufacturers on the basis that the alternative requirements are equivalent to the ESCC requirement and do not affect the component's reliability, are listed in the appendices attached to this specification.

2.1.1 Deviations from the Generic Specification

2.1.1.1 Deviation from Screening Tests - Chart F3

High Temperature Reverse Bias Burn-in and the subsequent Final Measurements for HTRB shall be omitted.

2.2 MARKING

The marking shall be in accordance with the requirements of ESCC Basic Specification No. 21700 and as follows.
The information to be marked on the component shall be:
(a) The ESCC qualified components symbol (for ESCC qualified components only).
(b) The ESCC Component Number.
(c) Traceability information.

2.3 TERMINAL STRENGTH

The test conditions for terminal strength, tested as specified in the ESCC Generic Specification, shall be as follows:
For TO-66, Test Condition: A, tension, with an applied force of 10N for a duration of 10s.
For TO-5 and TO-39, Test Condition: E, lead fatigue.

2.4 VERIFICATION OF SAFE OPERATING AREA

The Safe Operating Area shall be verified as specified in the ESCC Generic Specification and Maximum Ratings herein.

2.4.1 Safe Operating Area, Continuous DC, Variants 01 to 04

The test method and conditions shall be as follows:
Test Method = MIL-STD-750 method 3051, T_{case}= +100°C, $t_r + t_f$ = 10µs. The operating time for each test shall be ≥ 1s.
Test Number 1 : V_{CE} = 6V, I_C = 5A.
Test Number 2 (Variants 01, 02) : V_{CE} = 32V, I_C = 750mA.
Test Number 2 (Variants 03, 04) : V_{CE} = 40V, I_C = 750mA.
Test Number 3 (Variants 01, 02) : V_{CE} = 200V, I_C = 29mA.
Test Number 3 (Variants 03, 04) : V_{CE} = 300V, I_C = 21mA.

2.4.2 Safe Operating Area, Continuous DC, Variants 05, 06, 09, 10 and 11

The test method and conditions shall be as follows:
Test Method = MIL-STD-750 method 3051, T_{case}= +100°C, $t_r + t_f$ = 10µs. The operating time for each test shall be ≥ 1s.
Test Number 1 : V_{CE} = 3V, I_C = 5A.
Test Number 2 (Variants 05, 06, 09, 10) : V_{CE} = 29V, I_C = 400mA.
Test Number 2 (Variant 11) : V_{CE} = 37.5V, I_C = 400mA.
Test Number 3 (Variants 05, 06, 09, 10) : V_{CE} = 200V, I_C = 19mA.
Test Number 3 (Variant 11) : V_{CE} = 300V, I_C = 14mA.

2.4.3 Safe Operating Area, Switching Between Saturation and Cut-off with Clamped Inductive Load

The test method and conditions shall be as follows:
Test Method = MIL-STD-750 method 3053, Test Condition B, T_{case}= +100°C.
V_{CC} = 50V
I_C = 5A
L = 40mH
$t_r + t_f \leq 10\mu s$
t_p = 4ms
Duty Cycle ≤ 2%
$R_L \leq 2\Omega$
R_S = 500mΩ
$R_{BB1} = R_{BB2} = 50\Omega$
V_{BB1} = 50V
V_{BB2} = -4V
Clamp Voltage (Variants 01, 02, 05, 06, 09, 10) = 200(+0 -5)V
Clamp Voltage (Variants 03, 04, 11) = 300(+0 -5)V

2.5 ELECTRICAL MEASUREMENTS AT ROOM, HIGH AND LOW TEMPERATURES

Electrical measurements shall be performed at room, high and low temperatures.

2.5.1 Room Temperature Electrical Measurements

The measurements shall be performed at T_{amb}=+22 ±3°C.

Characteristics	Symbols	MIL-STD-750 Test Method	Test Conditions	Limits		Units
				Min	Max	
Collector-Emitter Breakdown Voltage	$V_{(BR)CER}$	3011	I_C = 10mA R_{BE}=100Ω Bias condition B Variants 01, 02, 05, 06, 09, 10 Variants 03, 04, 11 Note 1	 250 400	 - -	V
	$V_{(BR)CEO}$	3011	I_C = 10mA Bias condition D Variants 01, 02, 05, 06, 09, 10 Variants 03, 04, 11 Note 1	 200 300	 - -	V
Emitter-Base Breakdown Voltage	$V_{(BR)EBO}$	3026	I_E = 10µA Bias condition D Note 1	6	-	V
Collector-Emitter Cut-off Current	I_{CES}	3041	Bias condition C Variants 01, 02, 05, 06, 09, 10: V_{CE}=200V Variants 03, 04, 11: V_{CE}=300V	-	200	nA

Characteristics	Symbols	MIL-STD-750 Test Method	Test Conditions	Limits		Units
				Min	Max	
Collector-Base Cut-off Current	I_{CBO1}	3036	Bias condition D Variants 01, 02, 05, 06, 09, 10: V_{CB}=200V Variants 03, 04, 11: V_{CB}=300V	-	100	nA
	I_{CBO2}	3036	Bias condition D Variants 01, 02, 05, 06, 09, 10: V_{CB}=250V Variants 03, 04, 11: V_{CB}=400V	-	100	µA
Forward-Current Transfer Ratio	h_{FE1}	3076	V_{CE}=2V, I_C=500mA Variants 01, 02, 05, 06, 09, 10 Variants 03, 04, 11 Note 1	 40 25	 - -	-
	h_{FE2}	3076	V_{CE}=5V, I_C=1A Variants 01, 02, 05, 06, 09, 10 Variants 03, 04, 11 Note 1	 40 25	 120 75	-
	h_{FE3}	3076	V_{CE}=5V, I_C=3A Variants 01, 02, 05, 06, 09, 10 Variants 03, 04, 11 Note 1	 15 10	 - -	-
	h_{FE4}	3076	V_{CE}=5V, I_C=5A Note 1	5	-	-
Collector-Emitter Saturation Voltage	$V_{CE(sat)1}$	3071	I_C=3A Variants 01, 02, 05, 06, 09, 10: I_B=300mA Variants 03, 04, 11: I_B=600mA Notes 1, 2	-	400	mV
	$V_{CE(sat)2}$	3071	I_C=5A I_B=1A Notes 1, 2	-	1	V
Base-Emitter Saturation Voltage	$V_{BE(sat)1}$	3066	I_C=3A Test Condition A Variants 01, 02, 05, 06, 09, 10: I_B=300mA Variants 03, 04, 11: I_B=600mA Notes 1, 2	-	1.2	V
	$V_{BE(sat)2}$	3066	I_C=5A, I_B=1A Test Condition A Notes 1, 2	-	1.5	V

Characteristics	Symbols	MIL-STD-750 Test Method	Test Conditions	Limits		Units
				Min	Max	
Magnitude of Common-Emitter Small-Signal Short-Circuit Forward-Current Transfer Ratio	$\|h_{fe}\|$	3306	V_{CE}=5V, I_C=500mA f=10MHz Note 3	2	7	-
Output Capacitance	C_{obo}	3236	V_{CB}=10V I_E=0A f=1MHz Note 3	-	120	pF
Turn-on Time	t_{on}	3251	I_C=1A, Variants 01, 02, 05, 06, 09, 10: I_{B1}=-I_{B2}=30mA R_{BB}=167Ω R_1=215Ω R_2=185Ω Variants 03, 04, 11: I_{B1}=-I_{B2}=50mA R_{BB}=80Ω R_1=83Ω R_2=167Ω Notes 3, 4	-	250	ns
Turn-off Time	t_{off}	3251	I_C=1A, Variants 01, 02, 05, 06, 09, 10: I_{B1}=-I_{B2}=30mA R_{BB}=167Ω R_1=215Ω R_2=185Ω Variants 03, 04, 11: I_{B1}=-I_{B2}=50mA R_{BB}=80Ω R_1=83Ω R_2=167Ω Notes 3, 4	- -	1.5 2	µs

NOTES:

1. Pulsed measurement: Pulse Width ≤ 300µs, Duty Cycle ≤ 2%.
2. Devices shall be measured at less than 3.175mm from the case.
3. For AC characteristics read and record measurements shall be performed on a sample of 32 components with 0 failures allowed. Alternatively a 100% inspection may be performed.
4. t_{on} and t_{off} shall be measured using the following test circuit. The input waveform shall be supplied by a pulse generator with the following characteristics: $t_r = t_f \leq 15$ns, Pulse Width = 10µs, Z_{out}= 50Ω, Duty Cycle ≤ 2%. The output shall be monitored on an oscilloscope with the following characteristics: $Z_{in} \geq 10$MΩ, $C_{in} \leq 11.5$pF and $t_r = t_f \leq 15$ns. Resistors shall be non-inductive types.

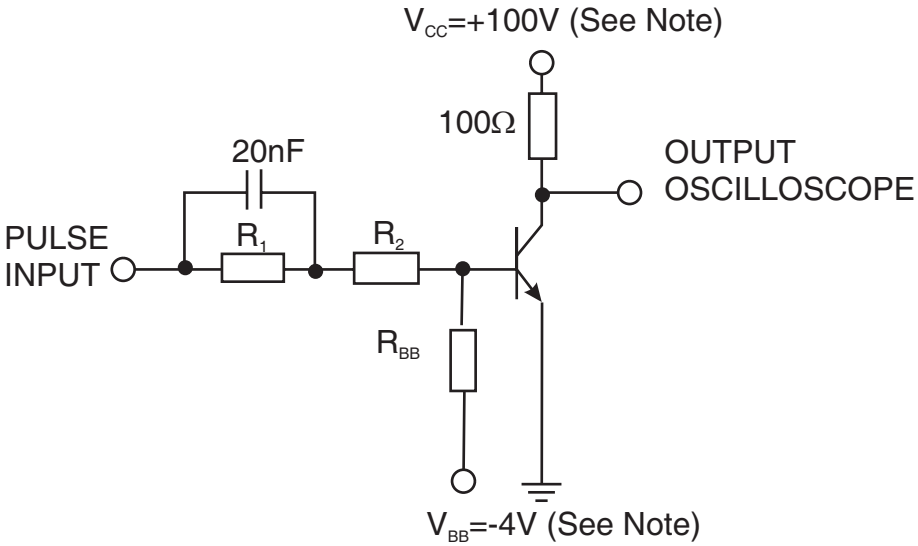

VOLTAGE WAVEFORMS

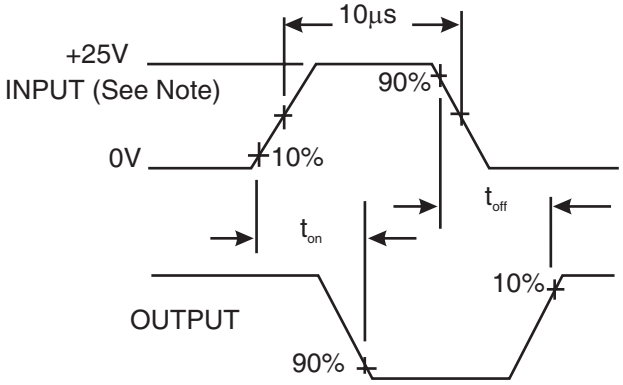

Note: Input Pulse Voltage, V_{BB} and V_{CC} shall be adjusted to obtain the specified values of I_{B1}, $-I_{B2}$ and I_C.

2.5.2 High and Low Temperatures Electrical Measurements

Characteristics	Symbols	MIL-STD-750 Test Method	Test Conditions Note 1	Limits		Units
				Min	Max	
Collector-Emitter Cut-off Current	I_{CES}	3041	T_{amb}=+150(+0 -5)°C Bias condition C Variants 01, 02, 05, 06, 09, 10: V_{CE}=200V Variants 03, 04, 11: V_{CE}=300V	-	100	µA
Forward-Current Transfer Ratio 2	h_{FE2}	3076	T_{amb}=-65(+5 -0)°C V_{CE}=5V ; I_C = 1A Variants 01, 02, 05, 06, 09, 10 Variants 03, 04, 11 Note 2	 15 10	 - -	-

NOTES:
1. Read and record measurements shall be performed on a sample of 5 components with 0 failures allowed. Alternatively a 100% inspection may be performed.
2. Pulsed measurement: Pulse Width ≤ 300µs, Duty Cycle ≤ 2%.

2.6 PARAMETER DRIFT VALUES

Unless otherwise specified, the measurements shall be performed at T_{amb}=+22 ±3°C.
The test methods and test conditions shall be as per the corresponding test defined in Room Temperature Electrical Measurements.
The drift values (Δ) shall not be exceeded for each characteristic specified. The corresponding absolute limit values for each characteristic shall not be exceeded.

Characteristics	Symbols	Limits			Units
		Drift Value Δ	Absolute		
			Min	Max	
Collector-Emitter Cut-off Current	I_{CES}	±20 or (1) ±100%	-	200	nA
Forward-Current Transfer Ratio 2 Variants 01, 02, 05, 06, 09, 10 Variants 03, 04, 11	h_{FE2}	±25%	 40 25	 120 75	-
Collector-Emitter Saturation Voltage 2	$V_{CE(sat)2}$	±100	-	1000	mV

NOTES:
1. Whichever is greater, referred to the initial value.

2.7 INTERMEDIATE AND END-POINT ELECTRICAL MEASUREMENTS

Unless otherwise specified, the measurements shall be performed at T_{amb}=+22 ±3°C.
The test methods and test conditions shall be as per the corresponding test defined in Room Temperature Electrical Measurements.
The limit values for each characteristic shall not be exceeded.

Characteristics	Symbols	Limits		Units
		Min	Max	
Collector-Emitter Cut-off Current	I_{CES}	-	200	nA
Forward-Current Transfer Ratio 2 Variants 01, 02, 05, 06, 09, 10 Variants 03, 04, 11	h_{FE2}	 40 25	 120 75	-
Collector-Emitter Saturation Voltage 2	$V_{CE(sat)2}$	-	1	V

2.8 POWER BURN-IN CONDITIONS

Characteristics	Symbols	Test Conditions	Units
Ambient Temperature	T_{amb}	+22 ±3	°C
Power Dissipation Variants 01, 02, 03, 04 Variants 05, 06, 09, 10, 11	P_{tot}	 2.5 1.2	W
Collector-Emitter Voltage Variants 01, 02, 03, 04 Variants 05, 06, 09, 10, 11	V_{CE}	 100 150	V

NOTES:

1. No heat sink nor forced air directly on the device shall be permitted.

2.9 OPERATING LIFE CONDITIONS

The conditions shall be as specified for Power Burn-in.