DOCUMENT CHANGE REQUEST

DCR number 379	Changes required for: General	Originator: S Jeffery
Date: 2007/10/16	Date sent: 2007/10/16	Organisation: ESA/ESTEC
Status: IMPLEMENTED		

Title:	Transistors Switching PNP, based on types 2N3636 and 2N3637		
Number:	5208/003	Issue:	1

Other documents affected:

Page:

Total re-write.

Paragraph:

Total re-write.

Original wording:

Proposed wording:

Total reformat of this specification as part of the ongoing conversion to the ESCC format. See below for summary of changes and attached Issue 2 Draft A of the specification.

Note: Known support for active procurement against this specification includes the following manufacturers:

SEMELAB/UK (not ESCC qualified but are currently willing to support the procurement of Variants 01 to 04).

Summary of changes to the current format, layout and content is as follows:

1. Rewording and restructuring of various sections and paragraphs of the specification, plus other editorial changes based on the layout and editorial content of other Detail Specifications already converted to ESCC format.

2. Deletion of redundant paragraphs and information such as Mechanical Requirements.

3. Para. 1.7 High Temperature Test Precautions requirements moved to be a note (Note 2) to the Maximum Ratings table.

4. Deletion of obsolete Variants 05 to 12 from the available range (not supported by Semelab).

5. Maximum Ratings table: Remark "Over entire operating temperature range" added for Collector-Emitter, Collector-Base and Emitter-Base voltages.

6. Maximum Ratings table, Characteristic "Power Dissipation (Continuous)": "(Continuous)" deleted.

DCR number 379	Changes required for: General	Originator: S Jeffery
Date: 2007/10/16	Date sent: 2007/10/16	Organisation: ESA/ESTEC
Status: IMPLEMENTED		

7. Maximum Ratings table: Characteristic "Operating Junction Temperature Range" re-named "Operating Temperature Range".

8. Figure 1 Parameter Derating Information moved to be a note to the Maximum Ratings table ("Note 1" amended).

9. Para. 4.3.2 Weight requirements moved to Component Type Variants table.

10. Figure 2 re-named "Physical Dimensions and Terminal Identification"; Figures 2(a) and 2(b) amended (standardisation of the TO-5 and TO-39 packages) and consolidated notes added.

11. Para. 4.2 Deviations from Generic Specification: Deviations From Chart IV and Deviations From Chart V have been deleted (no longer applicable for latest ESCC Generic Specification).

12. Para. 4.3.3 Terminal Strength: Erroneous text "Applied Force : 2.5±0.1 Newtons, 3 bends at 45°." deleted.

13. Para. 4.4.1 Case requirements corrected to reflect the TO-5 and TO-39 metal can packages.

14. Para. 4.4.2 Lead Material and Finish replaced by a reference to the Component Type Variants Para.

15. Para. 4.5.1 Required part marking corrected: Lead Identification deleted (not applicable to "TO-" packages) and ESCC qualified components symbol added.

16. Delete requirement for marking of the test level letter from the ESCC Component Number as per latest ESCC No. 21700.

17. Room Ambient test temperature (electrical measurements) changed from +25±3°C to +22±3°C.

18. Table 2, Characteristic "Collector-Base Breakdown Voltage": Symbol amended from BVCBO to V(BR)CBO; Sense of IC Test Condition corrected (-ve).

19. Table 2, Characteristic "Collector-Emitter Breakdown Voltage": Symbol corrected from BVCEO to V(BR)CEO; Sense of IC Test Condition corrected (-ve).

20. Table 2, Characteristic "Emitter-Base Breakdown Voltage": Symbol corrected from BVEBO to V(BR)EBO; Sense of IE Test Condition corrected (-ve).

21. Table 2, Characteristic "Collector-Base Cut-off Current": Senses of VCB Test Condition and Maximum Limit corrected (-ve).

22. Table 2, Characteristic "Emitter-Base Cut-off Current": Senses of VEB Test Condition and Maximum Limit corrected (-ve).

23. Table 2, Characteristics "Forward Current Transfer Ratio 1" and "Forward Current Transfer Ratio 2" combined and re-

DCR number 379	Changes required for: General	Originator: S Jeffery
Date: 2007/10/16	Date sent: 2007/10/16	Organisation: ESA/ESTEC
Status: IMPLEMENTED		

named "Forward-Current Transfer Ratio"; Senses of VCE and IC Test Conditions corrected (-ve).

24. Table 2, Characteristic "Collector-Emitter Saturation Voltage": Senses of IC and IB Test Conditions corrected (-ve).

25. Table 2, Characteristic "Base-Emitter Saturation Voltage": Test Method 3066 Test Condition corrected (was B, now A); Senses of IC and IB Test Conditions corrected (-ve).

26. Table 2, Characteristics "Turn-on Time" and "Turn-off Time": Test Condition "VC = 100Vdc" corrected to VCC = -100V"; Test Condition "VBE = 4.0Vdc" corrected to "VBB = 4V"; Senses of IC and IB Test Conditions corrected (-ve).

27. Table 2: Replace LTPD7 sampling for AC parameters tests (designated by "Note 1") with an equivalent fixed sample of 32 components with 0 failures (or 100%).

28. Figure 4 amended and moved to be a note (Note 2) to Room Temperature Electrical Measurements.

29. Table 3, Characteristic "Collector-Base Cut-off Current": Tolerance added to test temperature; Senses of VCB Test Condition and Maximum Limit corrected (-ve).

30. Table 3, Characteristic "Forward-Current Transfer Ratio 1": Tolerance added to test temperature; Senses of IC and VCE Test Conditions corrected (-ve).

31. Table 3 (High and Low Temperature Electrical Measurements): 100% inspection has been replaced by a sample of 5 components with 0 failures, or 100%, in line with the new Generic 5000 Issue 3.

32. Table 4: Absolute limits have been added for information.

33. Table 4, Characteristic "D.C. Forward Current Transfer Ratio 1" re-named "Forward-Current Transfer Ratio 1".

34. Tables 2, 3 and 4 - Test Conditions column: addition of Test, or Bias, Conditions for referenced MIL-STD-750 Test Methods as and where applicable.

35. Table 5(a): Tolerance added to Ambient Temperature conditions; "Minimum" added to Duration conditions.

36. Table 5(b): Ambient Temperature conditions amended (was +25°C, now +22±3°C).

37. Table 6, Characteristic "Collector-Emitter Cut-off Current": Sense of Maximum Limit corrected (-ve).

38. Table 6, Characteristic "D.C. Forward Current Transfer Ratio 1" re-named "Forward-Current Transfer Ratio 1".

39. Appendix 'A' deleted (redundant information as manufacturer Raytheon no longer manufactures these part types to this specification).

Justification:

DOCUMENT CHANGE REQUEST

DCR number 379	Changes required for: General	Originator: S Jeffery
Date: 2007/10/16	Date sent: 2007/10/16	Organisation: ESA/ESTEC
Status: IMPLEMENTED		

(see also change details for each item above)

1. Part of the ongoing activity of conversion of cover-sheeted ESA/SCC Specifications to the ESCC format.

2. To make the format and presentation consistent with the various other ESCC Detail Specifications already converted to ESCC format.

3. To make the content consistent with ESCC Generic Specification No. 5000 Issue 3.

4. To update the current product availability by the manufacturer(s), and consequently remove any obsolete Variants.

5. To make corrections to technical errors in the previous issue.

6. Standardisation of the TO-5 and TO-39 packages in all applicable ESCC Detail Specifications.

Attachments:

5208003_Issue_2_-_Draft_A.pdf, null

Modifications:

N/A

Approval signature:

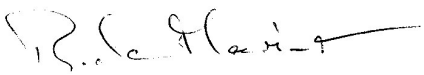

Date signed:

2007-10-16

TRANSISTORS, SWITCHING, PNP

BASED ON TYPE 2N3637

ESCC Detail Specification No. 5208/003

Issue 2 - Draft A	August 2007

Document Custodian: European Space Agency - see https://escies.org

LEGAL DISCLAIMER AND COPYRIGHT

European Space Agency, Copyright © 2007. All rights reserved.
The European Space Agency disclaims any liability or responsibility, to any person or entity, with respect to any loss or damage caused, or alleged to be caused, directly or indirectly by the use and application of this ESCC publication.
This publication, without the prior permission of the European Space Agency and provided that it is not used for a commercial purpose, may be:
– copied in whole, in any medium, without alteration or modification.
– copied in part, in any medium, provided that the ESCC document identification, comprising the ESCC symbol, document number and document issue, is removed.

DOCUMENTATION CHANGE NOTICE

(Refer to https://escies.org for ESCC DCR content)

DCR No.	CHANGE DESCRIPTION
TBD	Specification up issued to incorporate editorial and technical changes per DCR.

TABLE OF CONTENTS

1.	**GENERAL**	**5**
1.1	Scope	5
1.2	Applicable Documents	5
1.3	Terms, Definitions, Abbreviations, Symbols and Units	5
1.4	The ESCC Component Number and Component Type Variants	5
1.4.1	The ESCC Component Number	5
1.4.2	Component Type Variants	5
1.5	Maximum Ratings	5
1.6	Physical Dimensions and Terminal Identification	6
1.6.1	Metal Can Package (TO-5) - 3 lead	6
1.6.2	Metal Can Package (TO-39) - 3 lead	7
1.6.3	Notes to Physical Dimensions and Terminal Identification	8
1.7	Functional Diagram	9
1.8	Materials and Finishes	9
2.	**REQUIREMENTS**	**9**
2.1	General	9
2.1.1	Deviations from the Generic Specification	9
2.2	Marking	9
2.3	Terminal Strength	10
2.4	Electrical Measurements at Room, High and Low Temperatures	10
2.4.1	Room Temperature Electrical Measurements	10
2.4.2	High and Low Temperatures Electrical Measurements	12
2.5	Parameter Drift Values	13
2.6	Intermediate and End-Point Electrical Measurements	13
2.7	High Temperature Reverse Bias Burn-in Conditions	14
2.8	Power Burn-in Conditions	14
2.9	Operating Life Conditions	14

1. GENERAL

1.1 SCOPE

This specification details the ratings, physical and electrical characteristics and test and inspection data for the component type variants and/or the range of components specified below. It supplements the requirements of, and shall be read in conjunction with, the ESCC Generic Specification listed under Applicable Documents.

1.2 APPLICABLE DOCUMENTS

The following documents form part of this specification and shall be read in conjunction with it:

(a) ESCC Generic Specification No. 5000
(b) MIL-STD-750, Test Methods and Procedures for Semiconductor Devices

1.3 TERMS, DEFINITIONS, ABBREVIATIONS, SYMBOLS AND UNITS

For the purpose of this specification, the terms, definitions, abbreviations, symbols and units specified in ESCC Basic Specification No. 21300 shall apply.

1.4 THE ESCC COMPONENT NUMBER AND COMPONENT TYPE VARIANTS

1.4.1 The ESCC Component Number

The ESCC Component Number shall be constituted as follows:
Example: 520800301

- Detail Specification Reference: 5208003
- Component Type Variant Number: 01 (as required)

1.4.2 Component Type Variants

The component type variants applicable to this specification are as follows:

Variant Number	Based on Type	Case	Lead/Terminal Material and Finish	Weight max g
01	2N3637	TO-5	D2	1.2
02	2N3637	TO-5	D3 or D4	1.2
03	2N3637	TO-39	D2	1.2
04	2N3637	TO-39	D3 or D4	1.2

The lead/terminal material and finish shall be in accordance with the requirements of ESCC Basic Specification No. 23500.

1.5 MAXIMUM RATINGS

The maximum ratings shall not be exceeded at any time during use or storage.
Maximum ratings shall only be exceeded during testing to the extent specified in this specification and when stipulated in Test Methods and Procedures of the ESCC Generic Specification.

Characteristics	Symbols	Maximum Ratings	Unit	Remarks
Collector-Base Voltage	V_{CBO}	175	V	Over entire operating temperature range
Collector-Emitter Voltage	V_{CEO}	175	V	
Emitter-Base Voltage	V_{EBO}	-5	V	
Collector Current	I_C	1	A	Continuous
Power Dissipation	P_{tot}	1	W	At $T_{amb} \leq +25^oC$ Note 1
Operating Temperature Range	T_{op}	-65 to +200	^oC	Note 2
Storage Temperature Range	T_{stg}	-65 to +200	^oC	Note 2
Soldering Temperature	T_{sol}	+265	^oC	Note 3

NOTES:

1. For $T_{amb} > +25^oC$, derate linearly to 0W at $+200^oC$.
2. For Variants with tin-lead plating or hot solder dip lead finish all testing performed at $T_{amb} > +125^oC$ shall be carried out in a 100% inert atmosphere.
3. Duration 10 seconds maximum at a distance of not less than 1.5mm from the device body and the same lead shall not be resoldered until 3 minutes have elapsed.

1.6 PHYSICAL DIMENSIONS AND LEAD IDENTIFICATION

Consolidated notes are given following the case drawings and dimensions.

1.6.1 Metal Can Package (TO-5) - 3 lead

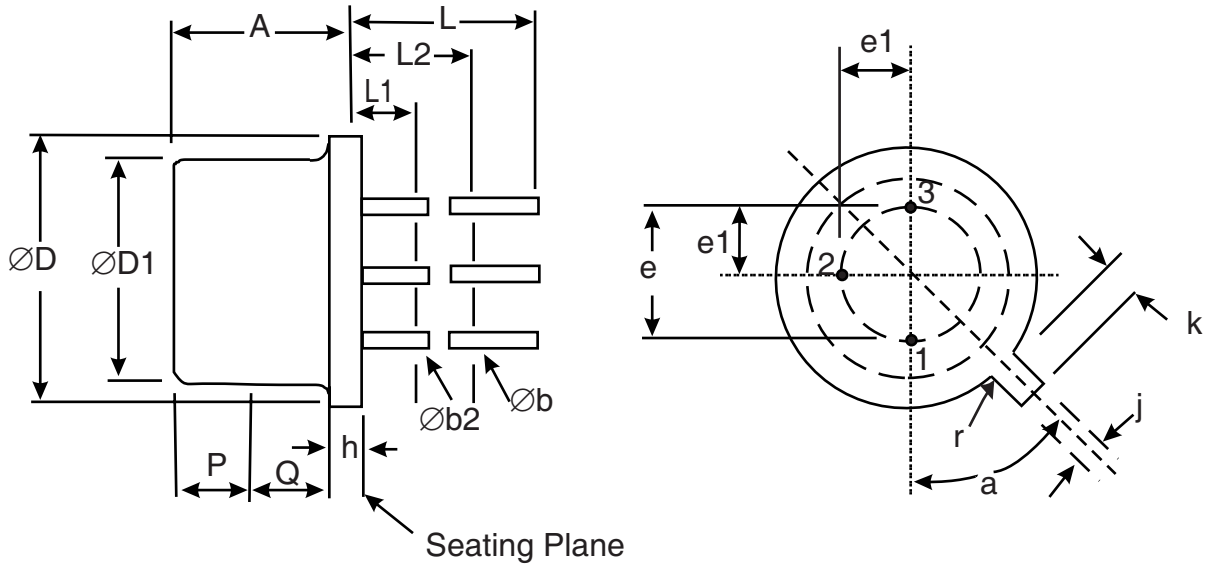

Symbols	Dimensions mm		Notes
	Min	Max	
A	6.1	6.6	
Øb	0.406	0.533	2, 3
Øb2	0.406	0.483	2, 3
ØD	8.51	9.4	
ØD1	7.75	8.51	
e	5.08 BSC		7
e1	2.54 BSC		
h	0.229	3.18	
j	0.711	0.864	
k	0.737	1.14	5
L	38.1	-	2
L1	-	1.27	2, 3
L2	6.35	-	2, 3
P	2.54	-	6
Q	-	-	8
r	-	0.179	
a	45° BSC		1, 9

1.6.2 Metal Can Package (TO-39) - 3 lead

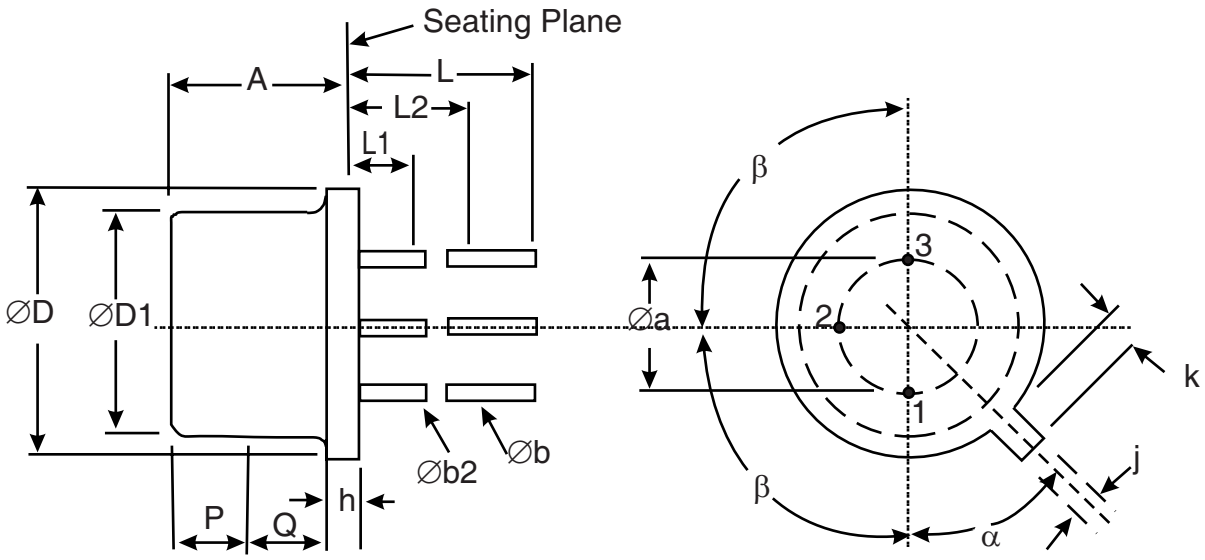

Symbols	Dimensions mm		Notes
	Min	Max	
Øa	4.83	5.35	

Symbols	Dimensions mm		Notes
	Min	Max	
A	6	6.6	
Øb	0.4	0.533	2, 4
Øb2	0.4	0.483	2, 4
ØD	8.31	9.4	
ØD1	7.75	8.51	6
h	0.229	3.18	
j	0.711	0.864	
k	0.737	1.14	5
L	12.7	19	2
L1	-	1.27	2, 4
L2	6.35	-	2, 4
P	2.54	-	6
Q	-	-	8
α	45° BSC		1, 9
β	90° BSC		1

1.6.3 Notes to Physical Dimensions and Terminal Identification

1. Terminal identification is specified by reference to the tab position where Lead 1 = emitter, Lead 2 = base and Lead 3 = collector.
2. Applies to all leads.
3. Øb2 applies between L1 and L2. Øb applies between L2 and 38.1mm from the seating plane. Diameter is uncontrolled within L1 and beyond 38.1mm from the seating plane.
4. Øb2 applies between L1 and L2. Øb applies between L2 and 12.7mm from the seating plane. Diameter is uncontrolled within L1 and beyond 12.7mm from the seating plane.
5. Measured from the maximum diameter of the actual device.
6. This zone is controlled for automatic handling. The variation in actual diameter within this zone shall not exceed 0.254mm.
7. Leads having maximum diameter 0.483mm measured in the gauging plane 1.37 (+0.025, -0)mm below the seating plane of the device shall be within 0.178mm of their true position relative to a maximum-width-tab.
8. The details of outline in this zone are optional.
9. Measured from the tab centreline.

1.7 FUNCTIONAL DIAGRAM

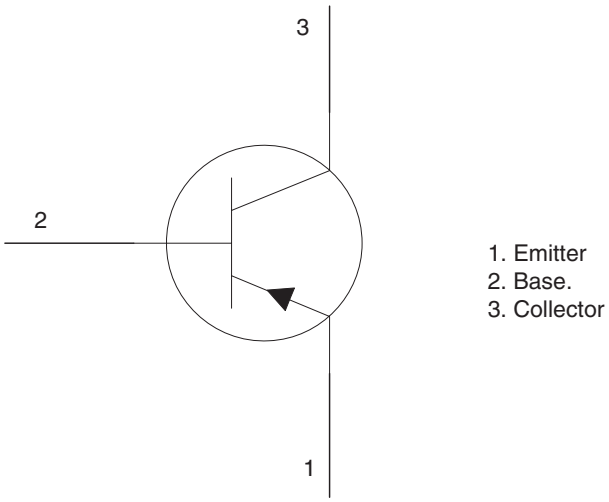

NOTES:
1. The collector is internally connected to the case.

1.8 MATERIALS AND FINISHES

Materials and finishes shall be as follows:

a) Case

The case shall be hermetically sealed and have a metal body with hard glass seals.

b) Leads/Terminals

As specified in Component Type Variants.

2. REQUIREMENTS

2.1 GENERAL

The complete requirements for procurement of the components specified herein are as stated in this specification and the ESCC Generic Specification. Permitted deviations from the Generic Specification, applicable to this specification only, are listed below.
Permitted deviations from the Generic Specification and this Detail Specification, formally agreed with specific Manufacturers on the basis that the alternative requirements are equivalent to the ESCC requirement and do not affect the component's reliability, are listed in the appendices attached to this specification.

2.1.1 Deviations from the Generic Specification

None.

2.2 MARKING

The marking shall be in accordance with the requirements of ESCC Basic Specification No. 21700 and as follows.
The information to be marked on the component shall be:

(a) The ESCC qualified components symbol (for ESCC qualified components only).
(b) The ESCC Component Number.
(c) Traceability information.

2.3 TERMINAL STRENGTH

The test conditions for terminal strength, tested as specified in the ESCC Generic Specification, shall be as follows:
Test Condition: E, lead fatigue.

2.4 ELECTRICAL MEASUREMENTS AT ROOM, HIGH AND LOW TEMPERATURES

Electrical measurements shall be performed at room, high and low temperatures.

2.4.1 Room Temperature Electrical Measurements

The measurements shall be performed at T_{amb}=+22 ±3°C.

Characteristics	Symbols	MIL-STD-750 Test Method	Test Conditions	Limits		Units
				Min	Max	
Collector-Base Breakdown Voltage	$V_{(BR)CBO}$	3001	I_E = -100µA Bias condition D	-175	-	V
Collector-Emitter Breakdown Voltage	$V_{(BR)CEO}$	3011	I_C = -10mA Bias condition D Note 1	-175	-	V
Emitter-Base Breakdown Voltage	$V_{(BR)EBO}$	3026	I_E = -10µA Bias condition D	-5	-	V
Collector-Base Cut-off Current	I_{CBO}	3036	V_{CB} = -100V Bias condition D	-	-100	nA
Emitter-Base Cut-off Current	I_{EBO}	3061	V_{EB} = -3V Bias condition D	-	-50	nA
Forward-Current Transfer Ratio	h_{FE1}	3076	V_{CE}=-10V I_C =-50mA Note 1	100	300	-
	h_{FE2}	3076	V_{CE}=-10V I_C =-150mA Note 1	50	-	-
Collector-Emitter Saturation Voltage	$V_{CE(sat)}$	3071	I_C=-50mA I_B=-5mA Note 1	-	-500	mV
Base-Emitter Saturation Voltage	$V_{BE(sat)}$	3066	I_C=-50mA I_B=-5mA Test Condition A Note 1	-650	-900	mV

Characteristics	Symbols	MIL-STD-750 Test Method	Test Conditions	Limits		Units
				Min	Max	
Turn-on Time	t_{on}	-	V_{CC}=-100V V_{BB}=4V I_C=-50mA I_B=-5mA Note 2	-	400	ns
Turn-off Time	t_{off}	-	V_{CC}=-100V V_{BB}=4V I_C=-50mA I_B=-5mA Note 2	-	600	ns

NOTES:

1. Pulsed measurement: Pulse Width ≤ 300µs, Duty Cycle ≤ 2%.
2. t_{on} and t_{off} shall be measured, on a read and record basis, on a sample of 32 components with 0 failures allowed. Alternatively a 100% inspection may be performed. The measurements shall be made using the following test circuit. The input waveform shall be supplied by a pulse generator with the following characteristics: Z_{out} = 50Ω, t_r = t_f ≤ 15ns, Pulse Width = 20µs, Duty Cycle ≤ 2%. The output shall be monitored on an oscilloscope with the following characteristics: Z_{in} ≥ 10MΩ, t_r ≤ 15ns, C_{in} ≤ 11.5pF.

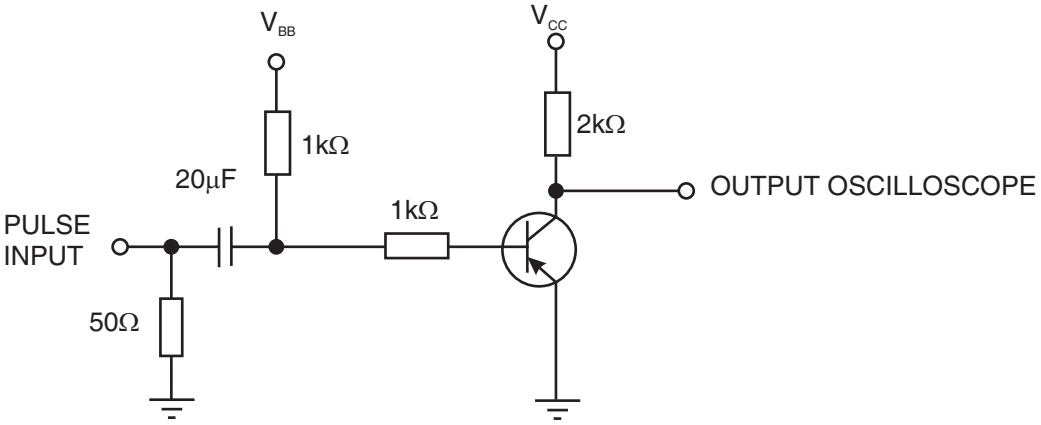

VOLTAGE WAVEFORMS

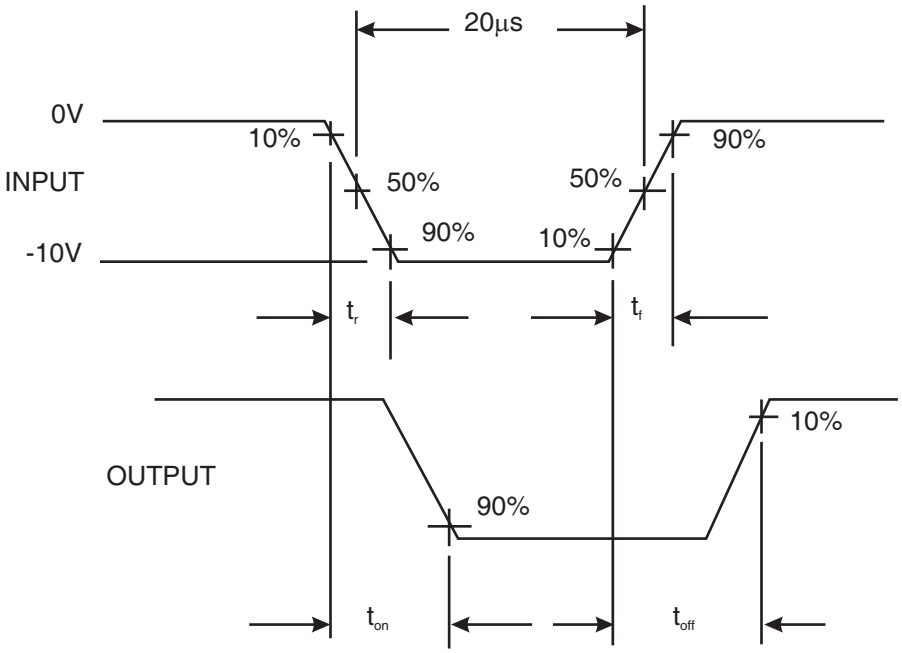

2.4.2 High and Low Temperatures Electrical Measurements

Characteristics	Symbols	MIL-STD-750 Test Method	Test Conditions Note 1	Limits		Units
				Min	Max	
Collector-Base Cut-off Current	I_{CBO}	3036	T_{amb}=+125 (+0 -5)°C V_{CB}=-100V Bias condition D	-	-100	μA
Forward-Current Transfer Ratio 1	h_{FE1}	3076	T_{amb}=-55 (+5-0)°C I_C=-50mA V_{CE}=-10V Note 2	50	300	-

NOTES:
1. Read and record measurements shall be performed on a sample of 5 components with 0 failures allowed. Alternatively a 100% inspection may be performed.
2. Pulsed measurement: Pulse Width ≤ 300µs, Duty Cycle ≤ 2%.

2.5 PARAMETER DRIFT VALUES

Unless otherwise specified, the measurements shall be performed at T_{amb}=+22 ±3°C.
The test methods and test conditions shall be as per the corresponding test defined in Room Temperature Electrical Measurements.
The drift values (Δ) shall not be exceeded for each characteristic specified. The corresponding absolute limit values for each characteristic shall not be exceeded.

Characteristics	Symbols	Limits			Units
		Drift Value Δ	Absolute		
			Min	Max	
Collector-Base Cut-off Current	I_{CBO}	±30 or (1) ±100%	-	-100	nA
Forward-Current Transfer Ratio 1	h_{FE1}	±15%	100	300	-
Collector-Emitter Saturation Voltage	$V_{CE(sat)}$	±75 or (1) ±15%	-	-500	mV

NOTES:
1. Whichever is the greater referred to initial value.

2.6 INTERMEDIATE AND END-POINT ELECTRICAL MEASUREMENTS

Unless otherwise specified, the measurements shall be performed at T_{amb}=+22 ±3°C.
The test methods and test conditions shall be as per the corresponding test defined in Room Temperature Electrical Measurements.
The limit values for each characteristic shall not be exceeded.

Characteristics	Symbols	Limits		Units
		Min	Max	
Collector-Base Cut-off Current	I_{CBO}	-	-100	nA
Forward-Current Transfer Ratio 1	h_{FE1}	100	300	-
Collector-Emitter Saturation Voltage	$V_{CE(sat)}$	-	-500	mV

2.7 HIGH TEMPERATURE REVERSE BIAS BURN-IN CONDITIONS

Characteristics	Symbols	Test Conditions	Units
Ambient Temperature	T_{amb}	+150 (+0 -5)	^{o}C
Collector-Emitter Voltage	V_{CE}	50	V
Duration	t	48 minimum	Hours

2.8 POWER BURN-IN CONDITIONS

Characteristics	Symbols	Test Conditions	Units
Ambient Temperature	T_{amb}	+22 ±3	^{o}C
Power Dissipation	P_{tot}	1	W
Collector-Emitter Voltage	V_{CE}	-50	V

2.9 OPERATING LIFE CONDITIONS

The conditions shall be as specified for Power Burn-in.