DOCUMENT CHANGE REQUEST

DCR number 381	Changes required for: General	Originator: S Jeffery
Date: 2007/10/16	Date sent: 2007/10/16	Organisation: ESA/ESTEC
Status: IMPLEMENTED		

Title:	Transistors Field-Effect N-Channel, based on types 2N4391/2N4392 and 2N4393		
Number:	5205/003	Issue:	1

Other documents affected:

Page:

Total re-write.

Paragraph:

Total re-write.

Original wording:

Proposed wording:

Total reformat of this specification as part of the ongoing conversion to the ESCC format. See below for summary of changes and attached Issue 2 Draft A of the specification.

Note: Known support for active procurement against this specification includes the following manufacturers:

SEMELAB/UK (not ESCC qualified but are currently willing to support the procurement of Variants 01, 02 and 03).

Summary of changes to the current format, layout and content is as follows:

1. Rewording and restructuring of various sections and paragraphs of the specification, plus other editorial changes based on the layout and editorial content of other Detail Specifications already converted to ESCC format.

2. Deletion of redundant paragraphs and information such as Mechanical Requirements.

3. Maximum Ratings table: Remark "Over entire operating temperature range" added for Drain-Source, Gate-Source and Gate-Drain voltages.

4. Maximum Ratings table: Characteristic "Total Power Dissipation (See Figure 1)" re-named "Power Dissipation"; remark "Tamb = 25deg.C" corrected to "Tamb <or=+25deg.C".

5. Addition of the following note to the Maximum Ratings table: "For Variants with tin-lead plating or hot solder dip lead finish all testing performed at Tamb > +125deg.C shall be carried out in a 100% inert atmosphere.".

DCR number 381	Changes required for: General	Originator: S Jeffery
Date: 2007/10/16	Date sent: 2007/10/16	Organisation: ESA/ESTEC
Status: IMPLEMENTED		

6. Figure 1 Parameter Derating Information moved to be a note to the Maximum Ratings table.

7. Para. 4.3.2 Weight requirements moved to Component Type Variants table.

8. Figure 2 re-named "Physical Dimensions and Terminal Identification" and amended to reflect the 'standardised' TO-18 package. Notes amended.

9. Figure 3, Functional Diagram: Amended (note added).

10. Para. 4.2 Deviations from Generic Specification: Deviations corrected (High Temperature Reverse Bias Burn-in is performed, Power Burn-in is not performed) and re-written per the latest ESCC Generic Specification.

11. Para. 4.4.1 Case requirements corrected to reflect the TO-18 metal can package.

12. Para. 4.4.2 Lead Material and Finish replaced by a reference to the Component Type Variants Para.

13. Para. 4.5.1 Required part marking corrected: Lead Identification deleted (not applicable to "TO-" packages) and ESCC qualified components symbol added.

14. Delete requirement for marking of the test level letter from the ESCC Component Number as per latest ESCC No. 21700.

15. Table 2, Characteristic "Total Gate Leakage Current" re-named "Gate Reverse Leakage Current".

16. Table 2, Characteristic "Gate Source Breakdown Voltage" re-named "Gate-Source Breakdown Voltage"; IG Test Condition corrected (was â..1.0ÂµA, now 1ÂµA).

17. Table 2, Characteristic "Gate Source Cut-off Voltage" re-named "Gate-Source Cut-off Voltage" and Symbol amended (was VGSoff, now VGS(off)).

18. Table 2, Characteristic "Drain Source Saturation Voltage" re-named "Drain-Source Saturation Voltage" and Symbol amended (was VDsat, now VDS(sat)).

19. Table 2, Characteristic "ON-State Drain Source Resistance" (No. 7) re-named "Static ON-State Drain-Source Resistance" and Symbol amended (was rDSon, now rDS(on)).

20. Table 2, Characteristic "ON-State Drain Source Resistance" (No. 8) re-named "Small-Signal ON-State Drain-Source Resistance" and Symbol amended (was rDSon, now rds(on)).

21. Table 2, Characteristic "Input Capacitance" re-named "Small-Signal Common-Source Short-Circuit Input Capacitance"; VDS Test Condition corrected to 20V (was 0V).

22. Table 2, Characteristic "Reverse Transfer Capacitance" re-named "Small-Signal Common-Source Short-Circuit Reverse

Transfer Capacitance".

23. Table 2, Characteristics "Rise Time", "Turn-on Delay Time", "Fall Time" and "Turn-off Delay Time" revised (Test Method 3459 reference added and "ID" in Test Conditions amended to "ID(on)").

24. Table 2: Sampling note for AC parameters tests amended to be a fixed sample of 32 components with 0 failures (or 100%).

25. Figure 4 amended and moved to be a note (Note 3) to Room Temperature Electrical Measurements.

26. Table 3, Characteristic "Total Gate Leakage Current" re-named "Gate Reverse Leakage Current"; tolerance added to test temperature.

27. Table 3, Characteristic "Drain Cut-off Current": Tolerance added to test temperature.

28. Table 3 (High and Low Temperature Electrical Measurements): 100% inspection has been replaced by a sample of 5 components with 0 failures, or 100%, in line with the new Generic 5000 Issue 3.

29. Table 4: 'Spec and/or Test Method' and 'Test Conditions' columns removed; absolute limits have been added for information.

30. Table 4, Characteristic "Total Gate Leakage Current" re-named "Gate Reverse Leakage Current"; note reference changed from 2 to 1.

31. Table 4, Characteristic "Gate Source Cut-off Voltage" re-named "Gate-Source Cut-off Voltage"; Symbol amended (was VGSoff, now VGS(off)).

32. Table 4: Notes amended (Note 1 deleted and Note 2 re-worded and re-numbered Note 1).

33. Tables 2, 3 and 4 - Test Conditions column: addition of Test, or Bias, Conditions for referenced MIL-STD-750 Test Methods as and where applicable.

34. Table 5 amended: Tolerance added to test temperature; Test Method and condition added as required by the new Generic 5000 Issue 3

35. Figure 5 deleted.

36. Table 6, Characteristic "Total Gate Leakage Current" re-named "Gate Reverse Leakage Current".

37. Table 6, Characteristic "Gate Source Cut-off Voltage" re-named "Gate-Source Cut-off Voltage"; Symbol amended (was VGSoff, now VGS(off)).

38. Table 6: 'Spec and/or Test Method', 'Test Conditions' columns and Note 1 removed.

DOCUMENT CHANGE REQUEST

DCR number 381	Changes required for: General	Originator: S Jeffery
Date: 2007/10/16	Date sent: 2007/10/16	Organisation: ESA/ESTEC
Status: IMPLEMENTED		

Justification:

(see also change details for each item above)

1. Part of the ongoing activity of conversion of cover-sheeted ESA/SCC Specifications to the ESCC format.

2. To make the format and presentation consistent with the various other ESCC Detail Specifications already converted to ESCC format.

3. To make the content consistent with ESCC Generic Specification No. 5000 Issue 3.

4. To introduce a standard note about testing at temperatures >+125deg.C which was missing from the previous issue.

5. To make corrections to technical errors in the previous issue.

6. Standardisation of the TO-18 package in all applicable ESCC Detail Specifications.

Attachments:

5205003_Issue_2_-_Draft_A.pdf, null

Modifications:

N/A

Approval signature:

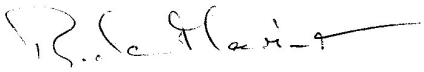

Date signed:

2007-10-16

TRANSISTORS, FIELD-EFFECT, N-CHANNEL

BASED ON TYPE 2N4391, 2N4392 AND 2N4393

ESCC Detail Specification No. 5205/003

Issue 2 - Draft A	October 2007

Document Custodian: European Space Agency - see https://escies.org

LEGAL DISCLAIMER AND COPYRIGHT

European Space Agency, Copyright © 2007. All rights reserved.

The European Space Agency disclaims any liability or responsibility, to any person or entity, with respect to any loss or damage caused, or alleged to be caused, directly or indirectly by the use and application of this ESCC publication.

This publication, without the prior permission of the European Space Agency and provided that it is not used for a commercial purpose, may be:

– copied in whole, in any medium, without alteration or modification.
– copied in part, in any medium, provided that the ESCC document identification, comprising the ESCC symbol, document number and document issue, is removed.

DOCUMENTATION CHANGE NOTICE

(Refer to https://escies.org for ESCC DCR content)

DCR No.	CHANGE DESCRIPTION
TBD	Specification up issued to incorporate editorial and technical changes per DCR.

TABLE OF CONTENTS

1.	**GENERAL**	**5**
1.1	Scope	5
1.2	Applicable Documents	5
1.3	Terms, Definitions, Abbreviations, Symbols and Units	5
1.4	The ESCC Component Number and Component Type Variants	5
1.4.1	The ESCC Component Number	5
1.4.2	Component Type Variants	5
1.5	Maximum Ratings	5
1.6	Physical Dimensions and Terminal Identification	6
1.6.1	Metal Can Package (TO-18) - 3 lead	6
1.7	Functional Diagram	7
1.8	Materials and Finishes	7
2.	**REQUIREMENTS**	**8**
2.1	General	8
2.1.1	Deviations from the Generic Specification	8
2.2	Marking	8
2.3	Terminal Strength	8
2.4	Electrical Measurements at Room, High and Low Temperatures	8
2.4.1	Room Temperature Electrical Measurements	8
2.4.2	High and Low Temperatures Electrical Measurements	11
2.5	Parameter Drift Values	12
2.6	Intermediate and End-Point Electrical Measurements	12
2.7	High Temperature Reverse Bias Burn-in Conditions	13
2.8	Operating Life Conditions	13

1. GENERAL

1.1 SCOPE

This specification details the ratings, physical and electrical characteristics and test and inspection data for the component type variants and/or the range of components specified below. It supplements the requirements of, and shall be read in conjunction with, the ESCC Generic Specification listed under Applicable Documents.

1.2 APPLICABLE DOCUMENTS

The following documents form part of this specification and shall be read in conjunction with it:

(a) ESCC Generic Specification No. 5000
(b) MIL-STD-750, Test Methods and Procedures for Semiconductor Devices

1.3 TERMS, DEFINITIONS, ABBREVIATIONS, SYMBOLS AND UNITS

For the purpose of this specification, the terms, definitions, abbreviations, symbols and units specified in ESCC Basic Specification No. 21300 shall apply.

1.4 THE ESCC COMPONENT NUMBER AND COMPONENT TYPE VARIANTS

1.4.1 The ESCC Component Number

The ESCC Component Number shall be constituted as follows:

Example: 520500301

- Detail Specification Reference: 5205003
- Component Type Variant Number: 01 (as required)

1.4.2 Component Type Variants

The component type variants applicable to this specification are as follows:

Variant Number	Based on Type	Case	Lead/Terminal Material and Finish	Weight max g
01	2N4391	TO-18	D2	0.9
02	2N4392	TO-18	D2	0.9
03	2N4393	TO-18	D2	0.9

The lead/terminal material and finish shall be in accordance with the requirements of ESCC Basic Specification No. 23500.

1.5 MAXIMUM RATINGS

The maximum ratings shall not be exceeded at any time during use or storage.

Maximum ratings shall only be exceeded during testing to the extent specified in this specification and

when stipulated in Test Methods and Procedures of the ESCC Generic Specification.

Characteristics	Symbols	Maximum Ratings	Unit	Remarks
Drain-Source Voltage	V_{DS}	40	V	Over entire operating temperature range
Gate-Source Voltage	V_{GS}	-40	V	
Gate-Drain Voltage	V_{GD}	-40	V	
Gate Current	I_G	50	mA	
Power Dissipation	P_{tot}	300	mW	At $T_{amb} \leq +25^oC$ Note 1
Operating Temperature Range	T_{op}	-55 to +175	^oC	Note 2
Storage Temperature Range	T_{stg}	-65 to + 200	^oC	Note 2
Soldering Temperature	T_{sol}	+235	^oC	Note 3

NOTES:

1. For $T_{amb} > +25^oC$, derate linearly to 0W at $+175^oC$.
2. For Variants with tin-lead plating or hot solder dip lead finish all testing performed at $T_{amb} > +125^oC$ shall be carried out in a 100% inert atmosphere.
3. Duration 10 seconds maximum at a distance of not less than 1.5mm from the device body and the same lead shall not be resoldered until 3 minutes have elapsed.

1.6 PHYSICAL DIMENSIONS AND TERMINAL IDENTIFICATION

1.6.1 Metal Can Package (TO-18) - 3 lead

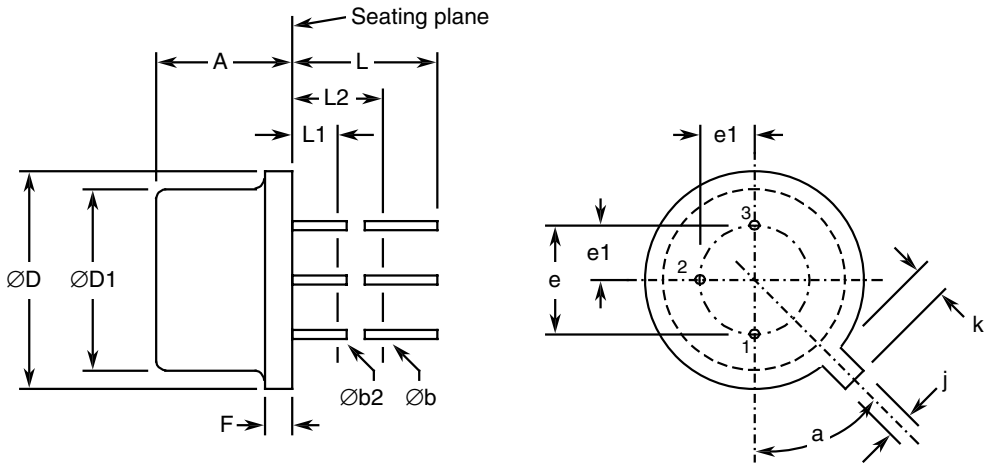

Symbols	Dimensions mm		Notes
	Min	Max	
A	4.32	5.33	
Øb	0.406	0.533	2, 3

Symbols	Dimensions mm		Notes
	Min	Max	
Øb2	0.406	0.483	2, 3
ØD	5.31	5.84	
ØD1	4.52	4.95	
e	2.54 BSC		4
e1	1.27 BSC		4
F	-	0.762	
j	0.914	1.17	
k	0.711	1.22	5
L	12.7	-	2
L1	-	1.27	3
L2	6.35	-	3
a	45° BSC		1, 4, 6

NOTES:
1. Terminal identification is specified by reference to the tab position where lead 1 = source, lead 2 = drain, lead 3 = gate.
2. Applies to all leads.
3. Øb2 applies between L1 and L2. Øb applies between L2 and 12.7mm from the seating plane. Diameter is uncontrolled within L1 and beyond 12.7mm from the seating plane.
4. Leads having maximum diameter 0.483mm measured in the gauging plane 1.37(+0.025,-0)mm below the seating plane of the device shall be within 0.178mm of their true position relative to a maximum-width-tab.
5. Measured from the maximum diameter of the actual device.
6. Tab centreline.

1.7 FUNCTIONAL DIAGRAM

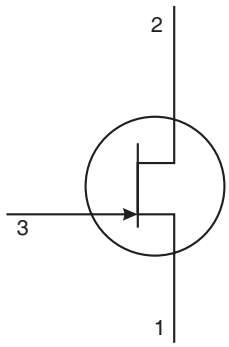

1. Source.
2. Drain.
3. Gate.

NOTES:
1. The gate is internally connected to the case.

1.8 MATERIALS AND FINISHES

Materials and finishes shall be as follows:

a) Case
The case shall be hermetically sealed and have a metal body with hard glass seals.
b) Leads/Terminals
As specified in Component Type Variants.

2. REQUIREMENTS

2.1 GENERAL

The complete requirements for procurement of the components specified herein are as stated in this specification and the ESCC Generic Specification. Permitted deviations from the Generic Specification, applicable to this specification only, are listed below.

Permitted deviations from the Generic Specification and this Detail Specification, formally agreed with specific Manufacturers on the basis that the alternative requirements are equivalent to the ESCC requirement and do not affect the component's reliability, are listed in the appendices attached to this specification.

2.1.1 Deviations from the Generic Specification

(a) Deviation from Screening Tests - Chart F3
Power Burn-in and the subsequent Parameter Drift Values (Final Measurements) shall be omitted.

2.2 MARKING

The marking shall be in accordance with the requirements of ESCC Basic Specification No. 21700 and as follows.

The information to be marked on the component shall be:

(a) The ESCC qualified components symbol (for ESCC qualified components only).
(b) The ESCC Component Number.
(c) Traceability information.

2.3 TERMINAL STRENGTH

The test conditions for terminal strength, tested as specified in the ESCC Generic Specification, shall be as follows:

Test Condition: A, tension, with an applied force of 5N for a duration of 10s.

2.4 ELECTRICAL MEASUREMENTS AT ROOM, HIGH AND LOW TEMPERATURES

Electrical measurements shall be performed at room, high and low temperatures.

2.4.1 Room Temperature Electrical Measurements

The measurements shall be performed at T_{amb}=+22 ±3°C.

Characteristics	Symbols	MIL-STD-750 Test Method	Test Conditions	Limits		Units
				Min	Max	
Gate Reverse Leakage Current	I_{GSS}	3411	V_{GS}=-20V Bias condition C	-	-100	pA
Gate-Source Breakdown Voltage	$V_{(BR)GSS}$	3401	I_G=1µA Bias condition C	-40	-	V
Drain Cut-off Current	I_{DSX}	3413	V_{DS}=20V Variant 01: V_{GS}=-12V Variant 02: V_{GS}=-7V Variant 03: V_{GS}=-5V Bias condition A	-	100	pA
Drain Current Variant 01 Variant 02 Variant 03	I_{DSS}	3413	V_{DS}=20V Bias condition C Note 1	 50 25 5	 150 75 30	mA
Gate-Source Cut-off Voltage Variant 01 Variant 02 Variant 03	$V_{GS(off)}$	3403	V_{DS}=20V I_D=1nA	 -4 -2 -0.5	 -10 -5 -3	V
Drain-Source Saturation Voltage	$V_{DS(sat)}$	3405	Variant 01: I_D=12mA Variant 02: I_D=6mA Variant 03: I_D=3mA Bias condition B	-	400	mV
Static ON-State Drain-Source Resistance Variant 01 Variant 02 Variant 03	$r_{DS(on)}$	3421	I_D=1mA Bias condition B	 - - -	 30 60 100	Ω
Small-Signal ON-State Drain-Source Resistance Variant 01 Variant 02 Variant 03	$r_{ds(on)}$	3423	I_D=0A f=1kHz Bias condition B Note 2	 - - -	 30 60 100	Ω
Small-Signal Common-Source Short-Circuit Input Capacitance	C_{iss}	3431	V_{GS}=0V V_{DS}=20V f=1MHz Note 2	-	26	pF

Characteristics	Symbols	MIL-STD-750 Test Method	Test Conditions	Limits		Units
				Min	Max	
Small-Signal Common-Source Short-Circuit Reverse Transfer Capacitance	C_{rss}	3433	V_{DS}=0V f=1MHz Variant 01: V_{GS}=-12V Variant 02: V_{GS}=-7V Variant 03: V_{GS}=-5V Note 2	-	4	pF
Rise Time	t_r	3459	V_{DD}=10V V_{GS}=0V Variant 01: V_{GSX}=-12V, $I_{D(on)}$=12mA Variant 02: V_{GSX}=-7V, $I_{D(on)}$=6mA Variant 03: V_{GSX}=-5V, $I_{D(on)}$=3mA Notes 2, 3	-	5	ns
Turn-on Delay Time	$t_{d(on)}$	3459	V_{DD}=10V V_{GS}=0V Variant 01: V_{GSX}=-12V, $I_{D(on)}$=12mA Variant 02: V_{GSX}=-7V, $I_{D(on)}$=6mA Variant 03: V_{GSX}=-5V, $I_{D(on)}$=3mA Notes 2, 3	-	15	ns
Fall Time	t_f	3459	V_{DD}=10V V_{GS}=0V Variant 01: V_{GSX}=-12V, $I_{D(on)}$=12mA Variant 02: V_{GSX}=-7V, $I_{D(on)}$=6mA Variant 03: V_{GSX}=-5V, $I_{D(on)}$=3mA Notes 2, 3	 - - -	 15 20 30	ns
Turn-off Delay Time	$t_{d(off)}$	3459	V_{DD}=10V V_{GS}=0V Variant 01: V_{GSX}=-12V, $I_{D(on)}$=12mA Variant 02: V_{GSX}=-7V, $I_{D(on)}$=6mA Variant 03: V_{GSX}=-5V, $I_{D(on)}$=3mA Notes 2, 3	 - - -	 20 35 50	ns

NOTES:

1. Pulsed measurement: Pulse Width ≤ 300µs, Duty Cycle ≤ 2%.
2. For AC characteristics read and record measurements shall be performed on a sample of 32

components with 0 failures allowed. Alternatively a 100% inspection may be performed.

3. t_r, $t_{d(on)}$, t_f and $t_{d(off)}$ shall be measured using the following test circuit. The input waveform shall be supplied by a pulse generator with the following characteristics: Z_{out} = 50Ω, $t_r = t_f \leq$ 500ps, Pulse Width = 1µs, Duty Cycle = 10%. The output waveform shall be monitored on an oscilloscope with the following characteristics: Z_{in} = 50Ω, $t_r \leq$ 400ps.

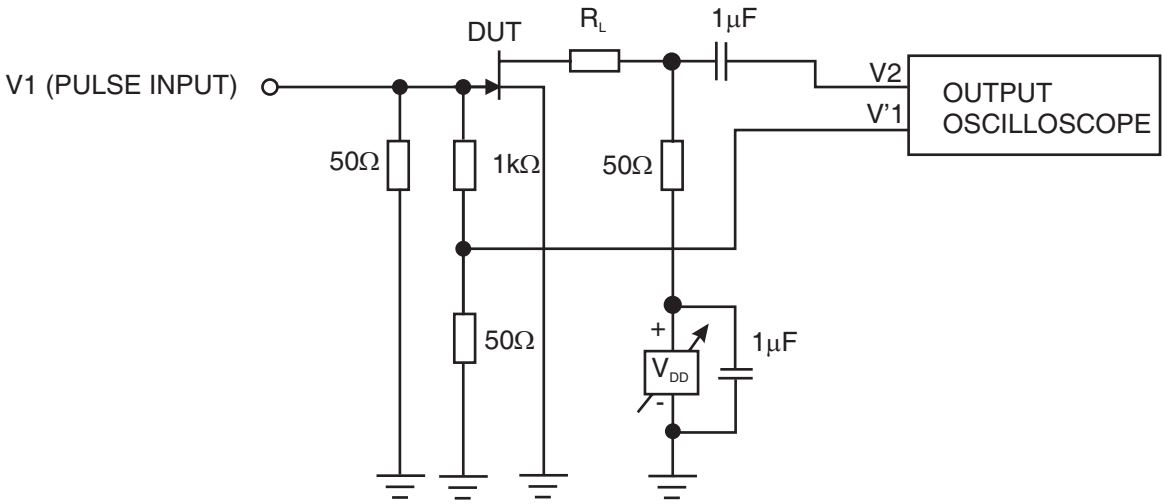

VOLTAGE WAVEFORMS

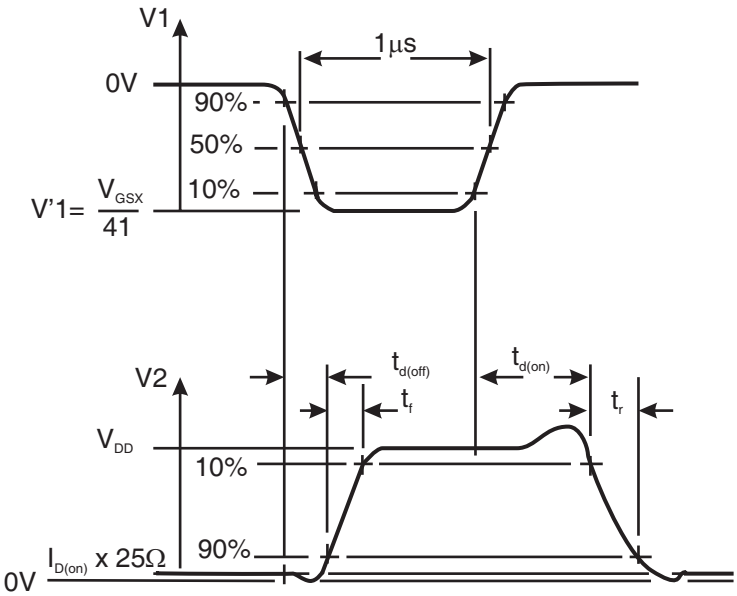

2.4.2 High and Low Temperatures Electrical Measurements

Characteristics	Symbols	MIL-STD-750 Test Method	Test Conditions Note 1	Limits		Units
				Min	Max	
Gate Reverse Leakage Current	I_{GSS}	3411	T_{amb}=+150(+0-5)°C V_{GS}=-20V Bias condition C	-	-200	nA

Characteristics	Symbols	MIL-STD-750 Test Method	Test Conditions Note 1	Limits		Units
				Min	Max	
Drain Cut-off Current	I_{DSX}	3413	T_{amb}=+150(+0-5)°C V_{DS}=20V Variant 01:V_{GS}=-12V Variant 02:V_{GS}=-7V Variant 03:V_{GS}=-5V Bias condition A	-	200	nA

NOTES:
1. Read and record measurements shall be performed on a sample of 5 components with 0 failures allowed. Alternatively a 100% inspection may be performed.

2.5 PARAMETER DRIFT VALUES

Unless otherwise specified, the measurements shall be performed at T_{amb}=+22 ±3°C.

The test methods and test conditions shall be as per the corresponding test defined in Room Temperature Electrical Measurements.

The drift values (Δ) shall not be exceeded for each characteristic specified. The corresponding absolute limit values for each characteristic shall not be exceeded.

Characteristics	Symbols	Limits			Units
		Drift Value Δ	Absolute		
			Min	Max	
Gate Reverse Leakage Current	I_{GSS}	±50 or (1) ±100%	-	-100	pA
Gate Source Cut-off Voltage Variant 01 Variant 02 Variant 03	$V_{GS(off)}$	±10%	 -4 -2 -0.5	 -10 -5 -3	V
Drain Current Variant 01 Variant 02 Variant 03	I_{DSS}	±15%	 50 25 5	 150 75 30	mA

NOTES:
1. Whichever is the greater referred to the initial value.

2.6 INTERMEDIATE AND END-POINT ELECTRICAL MEASUREMENTS

Unless otherwise specified, the measurements shall be performed at T_{amb}=+22 ±3°C.

The test methods and test conditions shall be as per the corresponding test defined in Room Temperature Electrical Measurements.

The limit values for each characteristic shall not be exceeded.

Characteristics	Symbols	Limits		Units
		Min	Max	
Gate Reverse Leakage Current	I_{GSS}	-	-100	pA
Gate Source Cut-off Voltage Variant 01 Variant 02 Variant 03	$V_{GS(off)}$	 -4 -2 -0.5	 -10 -5 -3	V
Drain Current Variant 01 Variant 02 Variant 03	I_{DSS}	 50 25 5	 150 75 30	mA

2.7 HIGH TEMPERATURE REVERSE BIAS BURN-IN CONDITIONS

MIL-STD-750, Test Method 1039, Condition A

Characteristics	Symbols	Test Conditions	Units
Ambient Temperature	T_{amb}	+150(+0-5)	^{o}C
Drain-Source Voltage	V_{DS}	0	V
Gate-Source Voltage	V_{GS}	-28	V
Duration	t	168 to 264	Hours

2.8 OPERATING LIFE CONDITIONS

The conditions shall be as specified for High Temperature Reverse Bias Burn-in except the duration shall be as specified in the ESCC Generic Specification.