DOCUMENT CHANGE REQUEST

DCR number 489	Changes required for: General	Originator: S Jeffery - ESCC
Date: 2009/04/14	Date sent: 2009/04/14	Organisation: ESA/ESTEC
Status: IMPLEMENTED		

Title:	Transistors Low Power NPN, based on type 2N3700		
Number:	5201/004	Issue:	3

Other documents affected:

Page:

See attachment

Paragraph:

See attachment

Original wording:

Proposed wording:

Various editorial and technical changes as detailed in the attachment, which are required to make this detail spec clear, complete and consistent with the standard format and content of specifications for similar Part Types. Note that this DCR replaces the withdrawn DCR 459.

Justification:

Improve the appearance, content and clarity of the spec.

Attachments:

5201004_Issue_4_-_Draft_B.pdf, null

Modifications:

N/A

Approval signature:



Date signed:

2009-04-14

European Space Components Coordination

Pages 1 to 14

TRANSISTORS, LOW POWER, NPN

BASED ON TYPE 2N3700

ESCC Detail Specification No. 5201/004

as applicable

Issue ~~3~~ 4 – Draft B	~~December 2008~~

Document Custodian: European Space Agency - see https://escies.org

as applicable

LEGAL DISCLAIMER AND COPYRIGHT

European Space Agency, Copyright © 2008. All rights reserved.
The European Space Agency disclaims any liability or responsibility, to any person or entity, with respect to any loss or damage caused, or alleged to be caused, directly or indirectly by the use and application of this ESCC publication.
This publication, without the prior permission of the European Space Agency and provided that it is not used for a commercial purpose, may be:
- copied in whole, in any medium, without alteration or modification.
- copied in part, in any medium, provided that the ESCC document identification, comprising the ESCC symbol, document number and document issue, is removed.

DOCUMENTATION CHANGE NOTICE

(Refer to https://escies.org for ESCC DCR content)

DCR No.	CHANGE DESCRIPTION
413 423 447	Specification up issued to incorporate editorial and technical changes per DCRs.

tbd

Characteristics	Symbols	Maximum Ratings	Unit	Remarks
Collector-Base Voltage	V_{CBO}	140	V	Over entire operating temperature range
Collector-Emitter Voltage	V_{CEO}	80	V	
Emitter-Base Voltage	V_{EBO}	7	V	
Collector Current	I_C	1	A	Continuous
Power Dissipation For TO-18 and CCP	P_{tot1}	0.5	W	At $T_{amb} \leq +25°C$ ~~Note 1~~
~~For CCP~~	~~P_{tot2}~~	~~0.76 (Note 2)~~	~~W~~	
For TO-18	P_{tot} X2	1.8	W	At $T_{case} \leq +25°C$ ~~Note 1~~
Operating Temperature Range	T_{op}	-65 to +200	°C	Note X2
Storage Temperature Range	T_{stg}	-65 to +200	°C	Note X2
Soldering Temperature For TO-18 For CCP	T_{sol}	 +260 +245	°C	 Note X3 Note X4

see attached

NOTES:

~~1. For T_{amb} or T_{case} > +25°C, derate linearly to 0W at +200°C.~~

~~2. When mounted on a 15 x 15 x 0.6mm ceramic substrate.~~

2.X For Variants with tin-lead plating or hot solder dip lead finish all testing performed at T_{amb} > +125°C shall be carried out in a 100% inert atmosphere.

3.X Duration 10 seconds maximum at a distance of not less than 1.5mm from the device body and the same lead shall not be resoldered until 3 minutes have elapsed.

4.X Duration 5 seconds maximum and the same terminal shall not be resoldered until 3 minutes have elapsed.

, and any handling,

1. Thermal Resistance, Junction-to-Case only applies to TO-18 packaged Variants.

1.6 PHYSICAL DIMENSIONS AND TERMINAL IDENTIFICATION

1.6.1 Metal Can Package (TO-18) - 3 lead

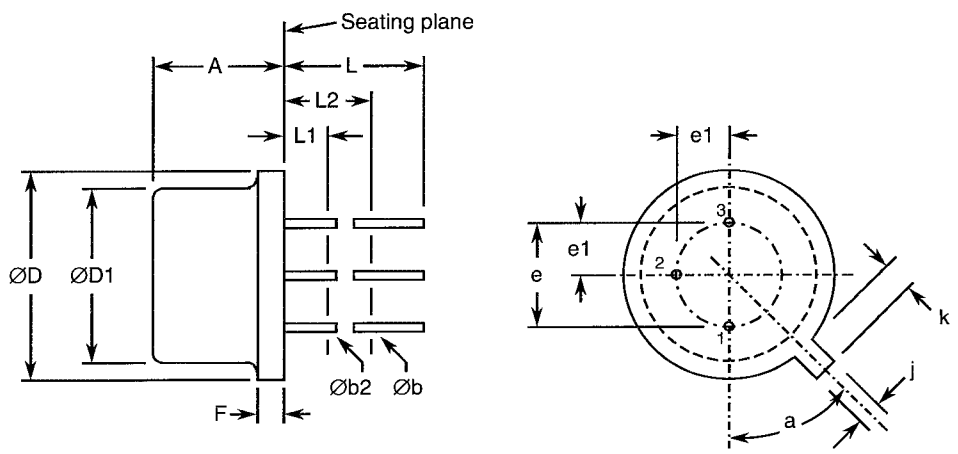

Thermal Resistance, Junction-to-Ambient	$R_{th(j-a)}$	350	°C/W	
Thermal Resistance, Junction-to-Case	$R_{th(j-c)}$	97.2	°C/W	Note 1

Symbols	Dimensions mm		Notes
	Min	Max	
A	4.32	5.33	
Øb	0.406	0.533	2, 3
Øb2	0.406	0.483	2, 3
ØD	5.31	5.84	
ØD1	4.52	4.95	
e	2.54 BSC		4
e1	1.27 BSC		4
F	-	0.762	
j	0.914	1.17	
k	0.711	1.22	5
L	12.7	-	2
L1	-	1.27	3
L2	6.35	-	3
a	45° BSC		1, 4, 6

Note addition of horizontal lines

NOTES:

1. Terminal identification is specified by reference to the tab position where lead 1 = emitter, lead 2 = base, lead 3 = collector.
2. Applies to all leads.
3. Øb2 applies between L1 and L2. Øb applies between L2 and 12.7mm from the seating plane. Diameter is uncontrolled within L1 and beyond 12.7mm from the seating plane.
4. Leads having maximum diameter 0.483mm measured in the gauging plane 1.37(+0.025,-0)mm below the seating plane of the device shall be within 0.178mm of their true position relative to a maximum-width-tab.
5. Measured from the maximum diameter of the actual device.
6. Tab centreline.

1.6.2 Chip Carrier Package (CCP) - 3 terminal

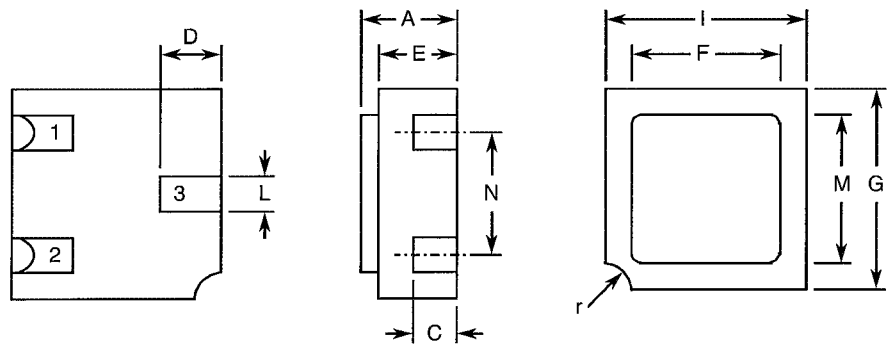

Note addition of horizontal lines

Symbols	Dimensions mm		Notes
	Min	Max	
A	1.15	1.5	
C	0.45	0.56	2
D	0.6	0.91	2
E	0.91	1.12	
F	1.9	2.15	
G	2.9	3.25	
I	2.4	2.85	
L	0.4	0.6	2
M	2.4	2.65	
N	1.8	2	
r	0.3 TYPICAL		1

NOTES:

1. Terminal identification is specified by reference to the corner notch position where terminal 1 = emitter, terminal 2 = base, terminal 3 = collector.
2. Applies to all terminals.

1.6.3 Chip Carrier Package (CCP) - 4 terminal

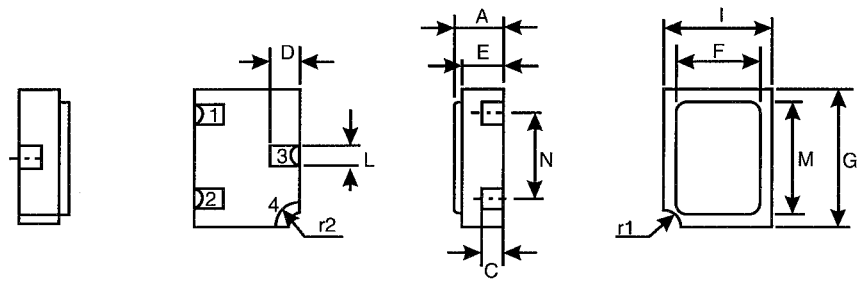

Note addition of horizontal lines

Symbols	Dimensions mm		Notes
	Min	Max	
A	1.15	1.5	
C	0.45	0.56	2
D	0.6	0.91	2
E	0.91	1.12	
F	1.9	2.15	
G	2.9	3.25	
I	2.4	2.85	
L	0.4	0.6	2

Note addition of horizontal lines

Symbols	Dimensions mm		Notes
	Min	Max	
M	2.4	2.65	
N	1.8	2	
r1	0.3 TYPICAL		1
r2	0.56 TYPICAL		1

NOTES:
1. Terminal identification is specified by reference to the corner notch position where terminal 1 = emitter, terminal 2 = base, terminal 3 = collector, terminal 4 = shielding connected to the lid.
2. Applies to terminals 1, 2, 3.

1.7 FUNCTIONAL DIAGRAM

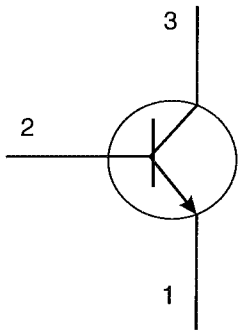

1. Emitter.
2. Base.
3. Collector.
4. Shield.

NOTES:
1. For TO-18, the collector is internally connected to the case.
2. For 3 terminal CCP (Variants 04, 05) the lid is not connected to any terminal.
3. For 4 terminal CCP (Variants 06, 07) the shielding terminal is connected to the lid.

1.8 MATERIALS AND FINISHES

Materials and finishes shall be as follows:

a) Case
For the metal can package the case shall be hermetically sealed and have a metal body with hard glass seals.
For the chip carrier package the case shall be hermetically sealed and have a ceramic body with a Kovar lid.

b) Leads/Terminals
As specified in Component Type Variants.

2. REQUIREMENTS

2.1 GENERAL

The complete requirements for procurement of the components specified herein are as stated in this specification and the ESCC Generic Specification. Permitted deviations from the Generic Specification,

Characteristics	Symbols	Limits		Units
		Min	Max	
Collector-Base Cut-off Current	I_{CBO}	-	10	nA
Collector-Emitter Saturation Voltage 1	$V_{CE(sat)1}$	-	200	mV
Forward-Current Transfer Ratio 2	h_{FE2}	100	300	-

2.7 POWER BURN-IN CONDITIONS

Characteristics	Symbols	Conditions	Units
Ambient Temperature	T_{amb}	+20 to +50	°C
Power Dissipation	P_{tot}	As per Maximum Ratings. $R_{th(j-a)}$ derated at the chosen T_{amb}	W
Collector-Base Voltage	V_{CB}	50	V

using the specified $R_{th(j-a)}$.

2.8 OPERATING LIFE CONDITIONS

The conditions shall be as specified for Power Burn-in.

Derate P_{tot1}

APPENDIX 'A'

AGREED DEVIATIONS FOR STMICROELECTRONICS (F)

ITEMS AFFECTED	DESCRIPTION OF DEVIATIONS
Deviations from Production Control-Chart F2	Special In-Process Control Internal Visual Inspection. For CCP packages the criteria specified for voids in the fillet and minimum die mounting material around the visible die perimeter for die mounting defects may be omitted providing that a radiographic inspection to verify the die-attach process is performed on a sample basis in accordance with STMicroelectronics procedure 0076637.
Deviations from Room Temperature Electrical Measurements	All AC characteristics (Room Temperature Electrical Measurement Note 2) may be considered guaranteed but not tested if successful pilot lot testing has been performed on the wafer lot which includes AC characteristic measurements per the Detail Specification. A summary of the pilot lot testing shall be provided if required by the Purchase Order.
Deviations from High and Low Temperatures Electrical Measurements	All characteristics specified may be considered guaranteed but not tested if successful pilot lot testing has been performed on the wafer lot which includes characteristic measurements at high and low temperatures per the Detail Specification. A summary of the pilot lot testing shall be provided if required by the Purchase Order.
Deviations from Screening Tests - Chart F3	Solderability is not applicable unless specifically stipulated in the Purchase Order.