DOCUMENT CHANGE REQUEST

DCR number 517	Changes required for: General	Originator: S Jeffery - ESCC
Date: 2009/05/06	Date sent: 2009/05/06	Organisation: ESA/ESTEC
Status: IMPLEMENTED		

Title:	Transistors Silicon Switching PNP, based on type 2N3467		
Number:	5208/009	Issue:	2

Other documents affected:

Page:

See attachment

Paragraph:

See attachment

Original wording:

Proposed wording:

Update the Maximum Ratings table (see the attachment for details) so that this detail spec is clear, complete and the content and format is in-line with other detail specifications for similar Part Types.

Justification:

Improve the content and clarity of the spec.

Attachments:

5208009_Issue_3_-_Draft_A.pdf, null

Modifications:

N/A

Approval signature:

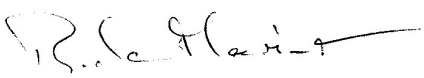

Date signed:

2009-05-06

European Space Components Coordination

TRANSISTORS, SWITCHING, PNP

BASED ON TYPE 2N3467

ESCC Detail Specification No. 5208/009

as applicable

Issue ~~2~~ 3 - Draft A	~~October 2008~~

Document Custodian: European Space Agency - see https://escies.org

as applicable

LEGAL DISCLAIMER AND COPYRIGHT

European Space Agency, Copyright © 2008. All rights reserved.
The European Space Agency disclaims any liability or responsibility, to any person or entity, with respect to any loss or damage caused, or alleged to be caused, directly or indirectly by the use and application of this ESCC publication.
This publication, without the prior permission of the European Space Agency and provided that it is not used for a commercial purpose, may be:
- copied in whole, in any medium, without alteration or modification.
- copied in part, in any medium, provided that the ESCC document identification, comprising the ESCC symbol, document number and document issue, is removed.

DOCUMENTATION CHANGE NOTICE

(Refer to https://escies.org for ESCC DCR content)

DCR No.	CHANGE DESCRIPTION
380	Specification up issued to incorporate editorial and technical changes per DCR.

tbd

At $T_{case} \leq +25°C$

see attached

Characteristics	Symbols	Maximum Ratings	Unit	Remarks
Collector-Base Voltage	V_{CBO}	-40	V	Over entire operating temperature range
Collector-Emitter Voltage	V_{CEO}	-40	V	
Emitter-Base Voltage	V_{EBO}	-5	V	
Collector Current	I_C	-1	A	Continuous
Power Dissipation	P_{tot} 1	1	W	At $T_{amb} \leq +25°C$
	P_{tot} 2	5	W	~~Note 1~~
Operating Temperature Range	T_{op}	-65 to +200	°C	Note 1
Storage Temperature Range	T_{stg}	-65 to +200	°C	Note 1
Soldering Temperature	T_{sol}	+265	°C	Note 2

NOTES:

~~1. For $T_{amb} > +25°C$, derate linearly to 0W at +200°C~~

1. For Variants with tin-lead plating or hot solder dip lead finish all testing performed at $T_{amb} > +125°C$ shall be carried out in a 100% inert atmosphere.
2. Duration 10 seconds maximum at a distance of not less than 1.5mm from the device body and the same lead shall not be resoldered until 3 minutes have elapsed.

1.6 PHYSICAL DIMENSIONS AND TERMINAL IDENTIFICATION

1.6.1 Metal Can Package (TO-39) - 3 lead

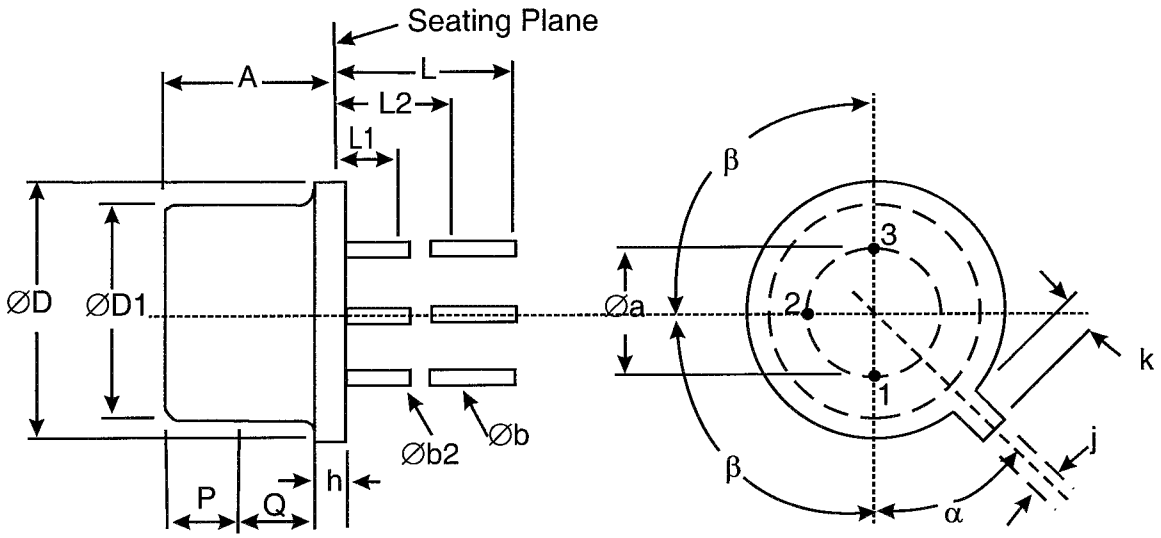

Symbols	Dimensions mm		Notes
	Min	Max	
Øa	4.83	5.35	
A	6	6.6	
Øb	0.4	0.533	2, 3
Øb2	0.4	0.483	2, 3

Thermal Resistance, Junction-to-Ambient	$R_{th(j-a)}$	175	°C/W	
Thermal Resistance, Junction-to-Case	$R_{th(j-c)}$	30	°C/W	