DOCUMENT CHANGE REQUEST

DCR number 581	Changes required for: General	Originator: S Jeffery
Date: 2011/12/06	Date sent: 2010/02/25	Organisation: ESA/ESTEC
Status: IMPLEMENTED		

Title:	Transistors Field-Effect N-Channel, based on types 2N4416 and 2N4416A		
Number:	5205/004	Issue:	2

Other documents affected:

Page:

See attachment

Paragraph:

See attachment

Original wording:

Proposed wording:

The Manufacturer Semelab (UK), although not ESCC QPL listed, actively supports the existing Variants in this specification; in fact, Semelab have requested for a number of changes and amendments to be made, and have recommended that some new Variants (in ceramic Chip-Carrier packages) are introduced. These technical and editorial changes are detailed in the attached file (ESCC 5204/004 Issue 3 Draft A). In addition the Maximum Ratings table is proposed to be updated to be in-line with other detail specifications for similar Part Types.

Justification:

Improve the content and clarity of the spec, introduce 4 viable Chip-Carrier Package [(CCP) â.. 4 terminal] Variants and bring the content and format in-line with other detail specifications for similar Part Types.

Attachments:
5205004_Issue_3_Draft_B.pdf, null
Modifications:
N/A
Approval signature:
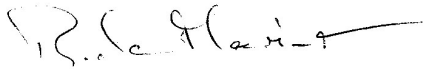
Date signed:
2011-12-06

ESCC
European Space Components Coordination



Pages 1 to 12

TRANSISTORS, FIELD-EFFECT, N-CHANNEL

BASED ON TYPE 2N4416 AND 2N4416A

ESCC Detail Specification No. 5205/004

as applicable

Issue ~~2~~ 3 – Draft B	May 2008

esa



Document Custodian: European Space Agency - see https://escies.org

as applicable

LEGAL DISCLAIMER AND COPYRIGHT

European Space Agency, Copyright © 2008. All rights reserved.
The European Space Agency disclaims any liability or responsibility, to any person or entity, with respect to any loss or damage caused, or alleged to be caused, directly or indirectly by the use and application of this ESCC publication.
This publication, without the prior permission of the European Space Agency and provided that it is not used for a commercial purpose, may be:

- copied in whole, in any medium, without alteration or modification.
- copied in part, in any medium, provided that the ESCC document identification, comprising the ESCC symbol, document number and document issue, is removed.

DOCUMENTATION CHANGE NOTICE

(Refer to https://escies.org for ESCC DCR content)

DCR No.	CHANGE DESCRIPTION
~~386~~ tbd	Specification up issued to incorporate editorial and technical changes per DCR.

TABLE OF CONTENTS

1.	**GENERAL**	**5**
1.1	Scope	5
1.2	Applicable Documents	5
1.3	Terms, Definitions, Abbreviations, Symbols and Units	5
1.4	The ESCC Component Number and Component Type Variants	5
1.4.1	The ESCC Component Number	5
1.4.2	Component Type Variants	5
1.5	Maximum Ratings	5
1.6	Physical Dimensions and Terminal Identification	6
1.6.1	Metal Can Package (TO-72) - 4 lead	6
1.7	Functional Diagram	7
1.8	Materials and Finishes	7
2.	**REQUIREMENTS**	**8**
2.1	General	8
2.1.1	Deviations from the Generic Specification	8
2.2	Wafer Lot Acceptance	8
2.3	Marking	8
2.4	Terminal Strength	8
2.5	Electrical Measurements at Room, High and Low Temperatures	8
2.5.1	Room Temperature Electrical Measurements	8
2.5.2	High and Low Temperatures Electrical Measurements	11
2.6	Parameter Drift Values	11
2.7	Intermediate and End-Point Electrical Measurements	11
2.8	High Temperature Reverse Bias Burn-in Conditions	12
2.9	Operating Life Conditions	12
[1.6.2	Chip Carrier Package (CCP) - 4 terminal	#

1. GENERAL

1.1 SCOPE

This specification details the ratings, physical and electrical characteristics and test and inspection data for the component type variants and/or the range of components specified below. It supplements the requirements of, and shall be read in conjunction with, the ESCC Generic Specification listed under Applicable Documents.

1.2 APPLICABLE DOCUMENTS

The following documents form part of this specification and shall be read in conjunction with it:

(a) ESCC Generic Specification No. 5000
(b) MIL-STD-750, Test Methods and Procedures for Semiconductor Devices

1.3 TERMS, DEFINITIONS, ABBREVIATIONS, SYMBOLS AND UNITS

For the purpose of this specification, the terms, definitions, abbreviations, symbols and units specified in ESCC Basic Specification No. 21300 shall apply.

1.4 THE ESCC COMPONENT NUMBER AND COMPONENT TYPE VARIANTS

1.4.1 The ESCC Component Number

The ESCC Component Number shall be constituted as follows:
Example: 520500401

- Detail Specification Reference: 5205004
- Component Type Variant Number: 01 (as required)

1.4.2 Component Type Variants

The component type variants applicable to this specification are as follows:

Variant Number	Based on Type	Case	Lead/Terminal Material and Finish	Weight max g
01	2N4416	TO-72	D2	0.9
02	2N4416A	TO-72	D2	0.9
03	2N4416A	CCP	2	0.06
04	2N4416A	CCP	2	0.06
05	2N4416A	CCP	4	0.06
06	2N4416A	CCP	4	0.06

The lead/terminal material and finish shall be in accordance with the requirements of ESCC Basic Specification No. 23500.

1.5 MAXIMUM RATINGS

The maximum ratings shall not be exceeded at any time during use or storage.
Maximum ratings shall only be exceeded during testing to the extent specified in this specification and when stipulated in Test Methods and Procedures of the ESCC Generic Specification.

See attached

Characteristics	Symbols	Maximum Ratings	Unit	Remarks
Drain-Source Voltage	V_{DS}	30	V	Over entire operating temperature range
Gate-Source Voltage Variant 01 Variant 02	V_{GS}	 -30 -35	V	
Gate-Drain Voltage Variant 01 Variant 02	V_{GD}	 -30 -35	V	
Gate Current	I_G	10	mA	
Power Dissipation	P_{tot}	300	mW	At $T_{amb} \leq +25^{o}C$ Note 1
Operating Temperature Range	T_{op}	-55 to +150	^{o}C	
Storage Temperature Range	T_{stg}	-65 to +200	^{o}C	
Soldering Temperature	T_{sol}	+235	^{o}C	Note 2

NOTES:

~~1. For $T_{amb} > +25^{o}C$, derate linearly to 0W at $+150^{o}C$.~~

1. 2 Duration 10 seconds maximum at a distance of not less than 1.5mm from the device body and the same lead shall not be resoldered until 3 minutes have elapsed.

1.6 PHYSICAL DIMENSIONS AND TERMINAL IDENTIFICATION

1.6.1 Metal Can Package (TO-72) - 4 lead

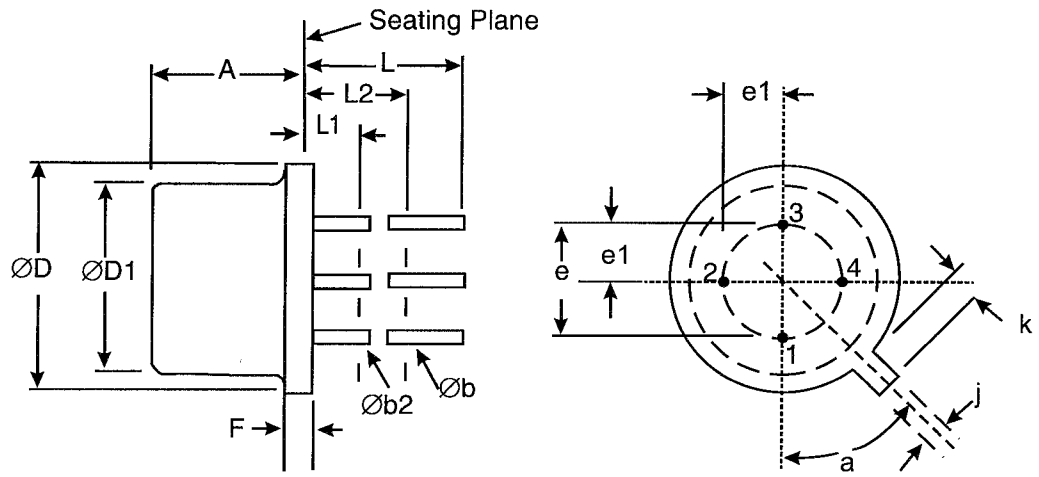

Symbols	Dimensions mm		Notes
	Min	Max	
A	4.32	5.33	
Øb	0.406	0.533	2, 3
Øb2	0.406	0.483	2, 3

2. Duration 5 seconds maximum and the same terminal shall not be resoldered until 3 minutes have elapsed.

Characteristics	Symbols	Maximum Ratings	Unit	Remarks
Drain-Source Voltage	V_{DS}	30	V	Over entire operating temperature range
Gate-Source Voltage Variant 01 All other Variants	V_{GS}	 -30 -35	V	
Gate-Drain Voltage Variant 01 All other Variants	V_{GD}	 -30 -35	V	
Gate Current	I_G	10	mA	
Power Dissipation	P_{tot}	300	mW	At $T_{amb} \leq +25°C$
Thermal Resistance, Junction-to-Ambient For TO-72 For CCP	$R_{th(j-a)}$	 416.7 583	°C/W	
Thermal Resistance, Junction-to-Solder Pad (Variants 03, 04, 05 and 06 only)	$R_{th(j-sp)}$	110	°C/W	
Operating Temperature Range For TO-72 For CCP	T_{op}	 -55 to +150 -65 to +200	°C	
Storage Temperature Range	T_{stg}	-65 to +200	°C	
Soldering Temperature For TO-72 For CCP	T_{sol}	 +235 +245	°C	 Note 1 Note 2

Symbols	Dimensions mm		Notes
	Min	Max	
ØD	5.31	5.84	
ØD1	4.52	4.95	
e	2.54 TP		5
e1	1.27 TP		5
F	-	0.762	
j	0.914	1.17	
k	0.711	1.22	4
L	12.7	-	2, 3
L1	-	1.27	2, 3
L2	6.35	-	2, 3
a	45° TP		5, 6

NOTES:

1. Terminal identification is specified by reference to the tab position where lead 1 = source, lead 2 = drain, lead 3 = gate and lead 4 = connected to the case.
2. Applies to all leads.
3. Øb2 applies between L1 and L2. Øb applies between L2 and 12.7mm from the seating plane. Diameter is uncontrolled within L1 and beyond 12.7mm from the seating plane.
4. Measured from the maximum diameter of the actual device.
5. Leads having maximum diameter 0.483mm measured in the gauging plane 1.37(+0.025,-0)mm below the seating plane of the device shall be within 0.178mm of their true position relative to a maximum-width-tab.
6. Measured from the tab centreline.

1.6.2 - See attached

1.7 FUNCTIONAL DIAGRAM

Variants 01, 02, 03 and 05

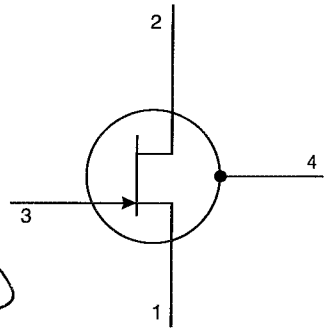

1. Source.
2. Drain.
3. Gate.
4. Connected to case (Variants 01 and 02); Connected to lid (Variants 04 and 05).

For the metal can package the

add diagram for Variants 04 and 06 here

1.8 MATERIALS AND FINISHES

Materials and finishes shall be as follows:

a) Case

The case shall be hermetically sealed and have a metal body with hard glass seals.

For the chip carrier package the case shall be hermetically sealed and have a ceramic body with a Kovar lid.

1.6.12 Chip Carrier Package (CCP) - 4 terminal

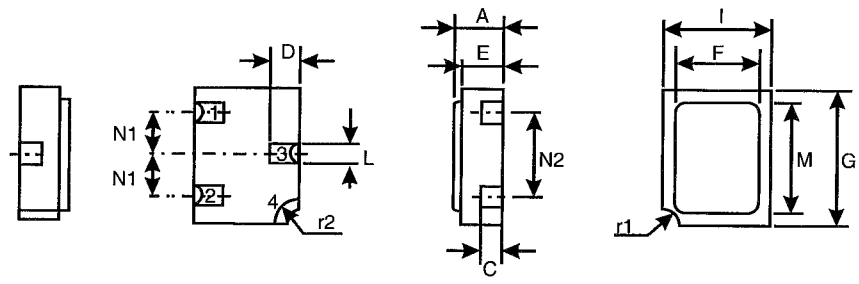

Symbols	Dimensions mm		Notes
	Min	Max	
A	1.15	1.5	
C	0.45	0.56	2
D	0.6	0.91	2
E	0.91	1.12	
F	1.9	2.15	
G	2.9	3.25	
I	2.4	2.85	
L	0.4	0.6	2
M	2.4	2.65	
N1	0.855	1.055	
N2	1.8	2	
r1	0.3 TYPICAL		1
r2	0.56 TYPICAL		1

NOTES:

1. Terminal identification is specified by reference to the corner notch position where terminal 1 = ~~emitter~~, terminal 2 = ~~base~~, terminal 3 = ~~collector~~, terminal 4 = shielding connected to the lid.
2. Applies to terminals 1, 2, 3.

gate

source or drain depending on the Variant

drain or source depending on the Variant

Variants 04 and 06

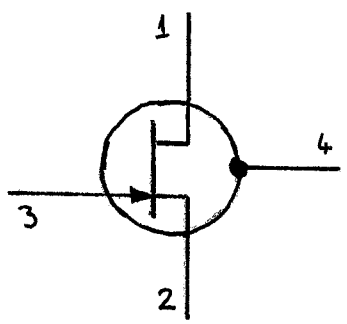

1. Drain.
2. Source.
3. Gate.
4. Connected to lid.

to Para. 1.7

b) Leads/Terminals
As specified in Component Type Variants.

2. REQUIREMENTS

2.1 GENERAL

The complete requirements for procurement of the components specified herein are as stated in this specification and the ESCC Generic Specification. Permitted deviations from the Generic Specification, applicable to this specification only, are listed below.
Permitted deviations from the Generic Specification and this Detail Specification, formally agreed with specific Manufacturers on the basis that the alternative requirements are equivalent to the ESCC requirement and do not affect the component's reliability, are listed in the appendices attached to this specification.

2.1.1 Deviations from the Generic Specification

(a) Deviation from Screening Tests - Chart F3

Power Burn-in and the subsequent Parameter Drift Values (Final Measurements) shall be omitted.

2.2 WAFER LOT ACCEPTANCE

SEM Inspection shall be performed.

2.3 MARKING

The marking shall be in accordance with the requirements of ESCC Basic Specification No. 21700 and as follows.
The information to be marked on the component shall be:
(a) The ESCC qualified components symbol (for ESCC qualified components only).
(b) The ESCC Component Number.
(c) Traceability information.

For TO-72)

2.4 TERMINAL STRENGTH

The test conditions for terminal strength, tested as specified in the ESCC Generic Specification, shall be as follows:
Test Condition: A, tension, with an applied force of 5 Newtons for a period of 10 seconds.

2.5 ELECTRICAL MEASUREMENTS AT ROOM, HIGH AND LOW TEMPERATURES

Electrical measurements shall be performed at room, high and low temperatures.

2.5.1 Room Temperature Electrical Measurements

The measurements shall be performed at T_{amb}=+22 ±3°C.

Characteristics	Symbols	MIL-STD-750 Test Method	Test Conditions	Limits		Units
				Min	Max	
Gate Reverse Leakage Current	I_{GSS}	3411	V_{DS}=0V V_{GS}=-20V Bias condition C	-	-100	pA
Gate-Source Breakdown Voltage Variant 01 Variant 02	$V_{(BR)GSS}$	3401	V_{DS}=0V I_G=1µA Bias condition C	 -30 -35	 - -	V
Gate-Source Forward Voltage	V_{GSF}	3403	V_{DS}=0V I_G=1mA	-	1	V
Gate-Source Cut-off Voltage Variant 01 Variant 02	$V_{GS(off)}$	3403	V_{DS}=15V I_D=1nA	 - -2.5	 -6 -6	V
Drain Current	I_{DSS}	3413	V_{DS}=15V Bias condition C Note 1	5	15	mA
Gate-Source Voltage	V_{GS}	3403	V_{DS}=15V I_D=500nA	-1	-5.5	V
Small-Signal Common-Source Short-Circuit Input Capacitance	C_{iss}	3431	V_{DS}=15V V_{GS}=0V f=1MHz Note 2	-	4	pF
Small-Signal Common-Source Short-Circuit Reverse Transfer Capacitance	C_{rss}	3433	V_{DS}=15V V_{GS}=0V f=1MHz Note 2	-	~~0.8~~ 1.2	pF
~~Modulus of Small-Signal~~ Common-Source ~~Short-Circuit~~ Forward Transf~~er~~conduct ~~Admit~~ance	~~Y_{21s}~~ g_{fs}	~~3455~~ -	V_{DS}=15V V_{GS}=0V f=1kHz Notes 1, 2	4.5	7.5	mS
~~Modulus of Small-Signal~~ Common-Source ~~Short-Circuit~~ Output ~~Admittance~~ Transconductance	~~Y_{22s}~~ g_{os}	~~3453~~ -	V_{DS}=15V V_{GS}=0V f=1kHz Notes 1, 2	-	50	µS
Small-Signal Common-Source Insertion Power Gain (Neutralised)	G_P	-	V_{DS}=15V I_D=5mA R_G=1kΩ f=~~4~~00MHz Note~~s~~ ~~2~~ 3	1~~0~~8	-	dB

Characteristics	Symbols	MIL-STD-750 Test Method	Test Conditions	Limits		Units
				Min	Max	
Noise Factor	NF	-	V_{DS}=15V I_D=5mA R_G=1kΩ f=400MHz Notes 1, 3	-	X2	dB

NOTES:

1. Pulsed measurement: Pulse Width ≤ 300µs, Duty Cycle ≤ 2%.
2. For AC characteristics read and record measurements shall be performed on a sample of 32 components with 0 failures allowed. Alternatively a 100% inspection may be performed.
3. Small-signal common-source insertion power gain (neutralised) and noise factor shall be ~~measured using the following test circuit~~ guaranteed but not tested.

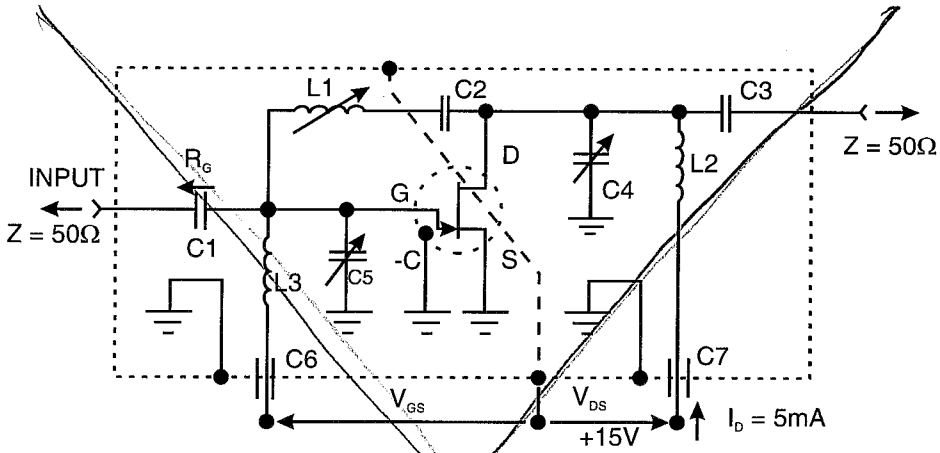

Adjust V_{GS} for I_D = 5mA and V_{GS} < 0V

Capacitor	Required Value
C1	1.8pF
C2	27pF
C3	1pF
C4	0.8 - 8 pF
C5	0.8 - 8 pF
C6	1nF
C7	1nF

Inductor	Value (nH)	No. of Turns	Characteristics
L1	200	6	No. 24 enamelled copper wire, close wound on 5.563mm ceramic coil form

Inductor	Value (nH)	No. of Turns	Characteristics
L2	30	1	No. 16 enamelled copper wire, 9.525mm ID (air core)
L3	22	1/2	No. 16 enamelled copper wire, 6.35mm ID (air core)

2.5.2 High and Low Temperatures Electrical Measurements

Characteristics	Symbols	MIL-STD-750 Test Method	Test Conditions Note 1	Limits		Units
				Min	Max	
Gate Reverse Leakage Current	I_{GSS}	3411	T_{amb}=+150(+0-5)°C V_{DS}=0V V_{GS}=-20V Bias condition C	-	-100 1	nA

NOTES:

1. Read and record measurements shall be performed on a sample of 5 components with 0 failures allowed. Alternatively a 100% inspection may be performed.

2.6 PARAMETER DRIFT VALUES

Unless otherwise specified, the measurements shall be performed at T_{amb}=+22 ±3°C.
The test methods and test conditions shall be as per the corresponding test defined in Room Temperature Electrical Measurements.
The drift values (Δ) shall not be exceeded for each characteristic specified. The corresponding absolute limit values for each characteristic shall not be exceeded.

Characteristics	Symbols	Limits			Units
		Drift Value Δ	Absolute		
			Min	Max	
Gate Reverse Leakage Current	I_{GSS}	±50 or (1) ±100%	-	-100	pA
Gate-Source Cut-off Voltage Variant 01 Variant 02	$V_{GS(off)}$	±10%	 - -2.5	 -6 -6	V
Drain Current	I_{DSS}	±15%	5	15	mA

NOTES:

1. Whichever is the greater referred to the initial value.

2.7 INTERMEDIATE AND END-POINT ELECTRICAL MEASUREMENTS

Unless otherwise specified, the measurements shall be performed at T_{amb}=+22 ±3°C.

The test methods and test conditions shall be as per the corresponding test defined in Room Temperature Electrical Measurements.
The limit values for each characteristic shall not be exceeded.

Characteristics	Symbols	Limits		Units
		Min	Max	
Gate Reverse Leakage Current	I_{GSS}	-	-100	pA
Gate-Source Cut-off Voltage Variant 01 Variant 02	$V_{GS(off)}$	 - -2.5	 -6 -6	V
Drain Current	I_{DSS}	5	15	mA

2.8 HIGH TEMPERATURE REVERSE BIAS BURN-IN CONDITIONS

MIL-STD-750, Test Method 1039, Condition A.

Characteristics	Symbols	Test Conditions	Units
Ambient Temperature	T_{amb}	+150(+0-5)	°C
Drain-Source Voltage	V_{DS}	0	V
Gate-Source Voltage	V_{GS}	-21	V
Duration	t	168 Minimum	Hours

2.9 OPERATING LIFE CONDITIONS

The conditions shall be as specified for High Temperature Reverse Bias Burn-in, except the duration shall be as specified in the ESCC Generic Specification.