DOCUMENT CHANGE REQUEST

DCR number 592	Changes required for: Qualification	Originator: J. Wong
Date: 2010/04/09	Date sent: 2010/04/09	Organisation: ESA/ESTEC
Status: IMPLEMENTED		

Title:	Coaxial Triaxal and Symmetric Cables Flexible -200 to +180 degreeC		
Number:	3902/002	Issue:	2

Other documents affected:

Page:

Changes indicated in the copy marked up by W. L. Gore GmbH reference Issue 3, Draft 1 dated July 2009 and submitted to the ESCC Secretariat on 9 April 2010.

Paragraph:

Changes indicated in the copy marked up by W. L. Gore GmbH reference Issue 3, Draft 1 dated July 2009 and submitted to the ESCC Secretariat on 9 April 2010.

Original wording:

Proposed wording:

Refer to Box 7 above.

Justification:

Addition of new balanced shielded variants numbers 26 to 30 inclusive. Qualification data submitted by W.L. Gore GmbH on 26 March 2010 in support of adding the new variants.

Attachments:

DCR592attachment.pdf, null

Modifications:

N/A

Approval signature:

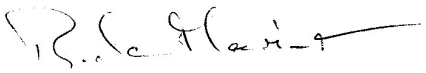

Date signed:

2010-04-09

THIS PRINT WILL NOT
BE KEPT UP TO DATE

ESCC
European Space Components Coordination

Pages 1 to ~~29~~ 30

COAXIAL, TRIAXIAL AND SYMMETRIC CABLES,

FLEXIBLE, -200 TO +180°C

ESCC Detail Specification No. 3902/002

ISSUE ~~2~~ 3 Draft 1

~~**April 2003**~~

July 2009

prepared: Erwin [illegible]
26.08.2009

approved: [illegible]
26.08.09

esa

Document Custodian: European Space Agency - see https://escies.org

LEGAL DISCLAIMER AND COPYRIGHT

European Space Agency, Copyright © 2003. All rights reserved.

The European Space Agency disclaims any liability or responsibility, to any person or entity, with respect to any loss or damage caused, or allleged to be caused, directly or indirectly by the use and application of this ESCC publication.

This publication, without the prior permission of the European Space Agency and provided that it is not used for a commercial purpose, may be:

- copied in whole in any medium without alteration or modification.
- copied in part, in any medium, provided that the ESCC document identification, comprising the ESCC symbol, document number and document issue, is removed.

DOCUMENTATION CHANGE NOTICE

(Refer to https://escies.org for ESCC DCR content)

DCR No.	CHANGE DESCRIPTION
30	Specification upissued to incorporate editorial changes per DCR.

TABLE OF CONTENTS

		Page
1.	**GENERAL**	~~5~~ 6
1.1	Scope	~~5~~ 6
1.2	Component Type Variants	~~5~~ 6
1.3	Maximum Ratings	~~5~~ 6
1.4	Parameter Derating Information	~~5~~ 6
1.5	Physical Dimensions and Characteristics	~~5~~ 6
1.6	Functional Diagram	~~5~~ 6
2.	**APPLICABLE DOCUMENTS**	~~10~~ 11
3.	**TERMS, DEFINITIONS, ABBREVIATIONS, SYMBOLS AND UNITS**	~~10~~ 11
4.	**REQUIREMENTS**	~~10~~ 11
4.1	General	~~10~~ 11
4.2	Deviations from Generic Specification	~~10~~ 11
4.2.1	Deviations from Special In-process Controls	~~10~~ 11
4.2.2	Deviations from Final Production Tests	~~11~~ 12
4.2.3	Deviations from Burn-in and Electrical Measurements	~~11~~ 12
4.2.4	Deviations from Qualification Tests	~~11~~ 12
4.2.5	Deviations from Lot Acceptance Tests	~~11~~ 12
4.3	Mechanical Requirements	~~11~~ 12
4.3.1	Dimension Check	~~11~~ 12
4.3.2	Weight	~~13~~ 14
4.3.3	Adhesion of Inner Conductor	~~13~~ 14
4.4	Materials and Finishes	~~13~~ 14
4.4.1	Construction of Datalines	~~13~~ 14
4.4.2	Inner Conductor	~~14~~ 15
4.4.3	Dielectric	~~15~~ 16
4.4.4	Filler	~~15~~ 16
4.4.5	Binder	~~15~~ 16
4.4.6	Shield	~~16~~ 17
4.4.7	Drain Wire	~~17~~ 18
4.4.8	Inner Sheath	~~17~~ 18
4.4.9	Second Shield	~~17~~ 18
4.4.10	Jacket	~~18~~ 19
4.4.11	Colour Coding	~~18~~ 19
4.5	Marking	~~19~~ 20
4.5.1	General	~~19~~ 20
4.5.2	The ESCC Component Number	~~19~~ 20
4.5.3	Characteristics	~~19~~ 20
4.5.4	Traceability Information	~~20~~ 21
4.5.5	Additional Marking	~~20~~ 21
4.6	Electrical Measurements	~~20~~ 21
4.6.1	Electrical Measurements at Room Temperature	~~20~~ 21
4.6.2	Electrical Measurements at High and Low Temperatures	~~20~~ 21
4.6.3	Circuits for Electrical Measurements	~~20~~ 21
4.7	Burn-in Tests	~~20~~ 21
4.8	Environmental and Endurance Tests	~~21~~ 22
4.8.1	Mechanical Properties of Conductor	~~21~~ 22
4.8.2	Alternate Bending Resistance	~~21~~ 22

		Page
4.8.3	Accelerated Ageing Stability	~~21~~ 22
4.8.4	Cold Bend Test	~~22~~ 23
4.8.5	Solderability	~~22~~ 23
4.8.6	Corona Extinction Voltage	~~22~~ 23
4.8.7	Resistance to Fluids	~~22~~ 23
4.8.8	Flammability Resistance	~~22~~ 23
4.8.9	Radiation Resistance	~~22~~ 23
4.8.10	Outgassing	~~23~~ 24
4.8.11	Long-term Ageing Test	~~23~~ 24
4.8.12	Atomic Oxygen Resistance	~~23~~ 24
4.8.13	Voltage Test	~~23~~ 24
4.8.14	Characteristic Impedance	~~23~~ 24
4.8.15	Attenuation	~~23~~ 24
4.8.16	Structural Return Loss	~~24~~ 25
4.8.17	Shielding Effectiveness	~~24~~ 25
4.8.18	Time Delay	~~24~~ 25
4.8.19	Time Delay Conductor Difference	~~25~~ 26

TABLES

1(a)	Type Variants	~~6~~ 7
1(b)	Maximum Ratings	7 8
A	Alternate Bending Resistance, Load and Diameter	~~21~~ 22
B	Shrinkage/Protrusion	~~21~~ 22
C	Cold Bend Test - Mandrel Diameters and Loads	~~22~~ 23
D1	Maximum Attenuation of Coaxial and Triaxial Cables	~~23~~ 24
D2	Maximum Attenuation of Balanced Shielded Lines	~~24~~ 25
2(a)	Electrical Measurements at Room Temperature - Coaxial and Triaxial Cables	~~26~~ 27
2(b)	Electrical Measurements at Room Temperature - Balanced Shielded Line	~~27~~ 28

FIGURES

1(a)	Parameter Derating Information	~~8~~ 9
1(b)	Minimum Shielding Effectiveness	~~8~~ 9
2	Physical Characteristics	~~9~~ 10

ANNEXES

I	Equivalence of RG Numbers and MIL-C-17 Detail Specification	~~28~~ 29

APPENDICES (Applicable to specific Manufacturers only)

'A'	Agreed Deviations for W.L. Gore and Associates GmbH (D)	~~29~~ 30

1. GENERAL

1.1 SCOPE

This specification details the ratings, physical and electrical characteristics, test and inspection data for flexible, coaxial, impedance controlled, radio frequency cables with 1 and 2 shields, and for symmetric impedance radio frequency wires with 1 shield, −200 to +180 °C. It shall be read in conjunction with ESCC Generic Specification No. 3902, the requirements of which are supplemented herein.

1.2 COMPONENT TYPE VARIANTS

Variants of the basic types of datalines specified herein, which are also covered by this specification, are given in Table 1(a).

1.3 MAXIMUM RATINGS

The maximum ratings, which shall not be exceeded at any time during use or storage, applicable to the finished datalines specified herein, are as scheduled in Table 1(b).

1.4 PARAMETER DERATING INFORMATION

The derating information applicable to the finished wires and cables specified herein is as follows:

- The maximum current for each wire used in a bundle shall be:-

$$I_{Bmax} = I_{max} \times \frac{29 - n}{28} \quad (\text{for } 1 \leq n \leq 15)$$

$$I_{Bmax} = \frac{I_{max}}{2} \quad (\text{for } n > 15)$$

where n = number of wires in the bundle;

- The temperature derating information is shown in Figure 1 with maximum current I_{max} for a single wire.
- The derating factors contained herein indicate maximum stress values and do not preclude further derating.

1.5 PHYSICAL DIMENSIONS AND CHARACTERISTICS

The physical dimensions and characteristics of the datalines specified herein, are shown in Table 1(a) and Figure 2 respectively.

1.6 FUNCTIONAL DIAGRAM

Not applicable.

TABLE 1(a) - TYPE VARIANTS

TABLE 1(a) - COAXIAL CABLE

Variant	Z_0 (Ω)	AWG	Inner Conductor				Diel. Core Ø (mm)	Shield		Coaxial Cable Characteristics	
			No. of Strands × Ø (mm)	Max. Ø (mm)	Nom. Sect (mm²)	Max. DC Resist. (Ω/km)		Constr.	Strand Ø (mm)	Max. Ø (mm)	Max. Weight (kg/km)
03	50	28	7×0.126	0.39	0.089	239	1.05	BS	0.079	1.75	6.5
04	50	26	7×0.160	0.49	0.14	150	1.25	BS	0.079	2.05	8.3
05	50	20	19×0.202	1.03	0.61	30.8	3.0	BS	1.02	3.9	28
06	75	26	7×0.160	0.49	0.14	150	2.07	BS	0.079	2.9	14

TABLE 1(a) - TRIAXIAL CABLE

Variant	Z_0 (Ω)	AWG	Inner Conductor				Diel. Core Ø (mm)	Inner Shield Strand Ø (mm)	Inner Jacket Ø (mm)	Second Shield		Triaxial Cable Characteristics	
			No. of Strands × Ø (mm)	Max. Ø (mm)	Nom. Sect (mm²)	Max. DC Resist. (Ω/km)				Foil Shield Thickness (mm)	Strand Ø (mm)	Max. Ø (mm)	Max. Weight (kg/km)
10	50	26	7×0.160	0.49	0.14	150	1.25	0.079	1.9	-	0.079	2.9	16
11	50	20	19×0.202	1.03	0.61	30.8	3.0	0.102	3.8	-	0.102	5.2	52
12	75	20	19×0.202	1.03	0.61	30.8	4.33	0.102	5.2	-	0.102	7.3	74
13	75	20	19×0.202	1.03	0.61	30.8	4.33	0.102	5.2	0.025	0.102	7.3	85

NOTES

1. Variant 13 is additionally specified under drawing number GSC-05-2616-00. It has increased shielding performance compared to Variant 12.

TABLE 1(a) - BALANCED SHIELDED LINE

Variant	Z_0 (Ω)	AWG	Inner Conductor				Insul. Wire Ø (mm)	Filler Ø (mm)	Shield		Balanced Shielded Line	
			No. of Strands × Ø (mm)	Max. Ø (mm)	Nom. Sect (mm²)	Max. DC Resist. (Ω/km)			Under-Shield Ø (mm)	Strand Ø (mm)	Max. Ø (mm)	Max. Weight (kg/km)
20	75	24	19×0.126	0.65	0.24	95	1.2	1.0	2.4	0.079	3.9	24
21	100	22	19×0.160	0.82	0.38	54	2.1	2.0	4.2	0.079	5.2	36
22	120	30	7×0.102	0.32	0.057	401	0.8	1.0	1.6	0.079	2.8	14
23	120	28	7×0.126	0.39	0.089	256	1.3	1.0	2.6	0.079	3.3	18
24	120	26	7×0.160	0.49	0.14	159	1.6	1.0	3.2	0.079	3.8	21
25	120	24	19×0.126	0.65	0.24	89	2.1	1.0	4.2	0.079	5.3	32
26	100	30	7×0.102	0.32	0.057	401	0.85	-	1.7	0.079	2.2	17
27	100	28	7×0.126	0.39	0.089	256	0.89	1.0	1.78	0.079	2.9	14
28	100	26	7×0.160	0.49	0.14	159	1.1	1.0	2.2	0.079	3.1	18
29	100	24	19×0.126	0.65	0.24	89	1.5	1.0	3.0	0.079	3.9	22
30	100	22	19×0.160	0.82	0.38	54	1.8	1.0	3.6	0.079	4.8	28

NOTES 1. Variant 26 without Fillers

TABLE 1(b) - MAXIMUM RATINGS

No.	Characteristics	Symbol	Maximum Ratings	Unit	Remarks
1	Operating Voltage (Continuous) Variant 03 Variants 04, 10, 21, 22, 23, 24, 26, 27, 28, 29, 30 Variants 06, 25 All Other Variants	V_{op}	 180 200 250 300	V_{rms}	-
2	Current AWG 30 AWG 28 AWG 26 AWG 24 AWG 22 AWG 20	I	1.3 1.5 2.5 3.5 5.0 7.5	A	
3	Operating Frequency Coaxial, Triaxial Balanced Shielded Line	f_M	 1.0 100	 GHz MHz	-
4	Operating Temperature Range	T_{op}	−200 to +180	°C	T_{amb} Note 1
5	Storage Temperature Range	T_{stg}	−200 to +180	°C	-

NOTES

1. The above specified current will generate a temperature rise of approximately 50°C above ambient temperature in a vacuum environment. Precautions shall be taken to prevent the total temperature of the wire (ambient plus rise) exceeding the continuous operating temperature of the wire.

FIGURE 1(a) - PARAMETER DERATING INFORMATION

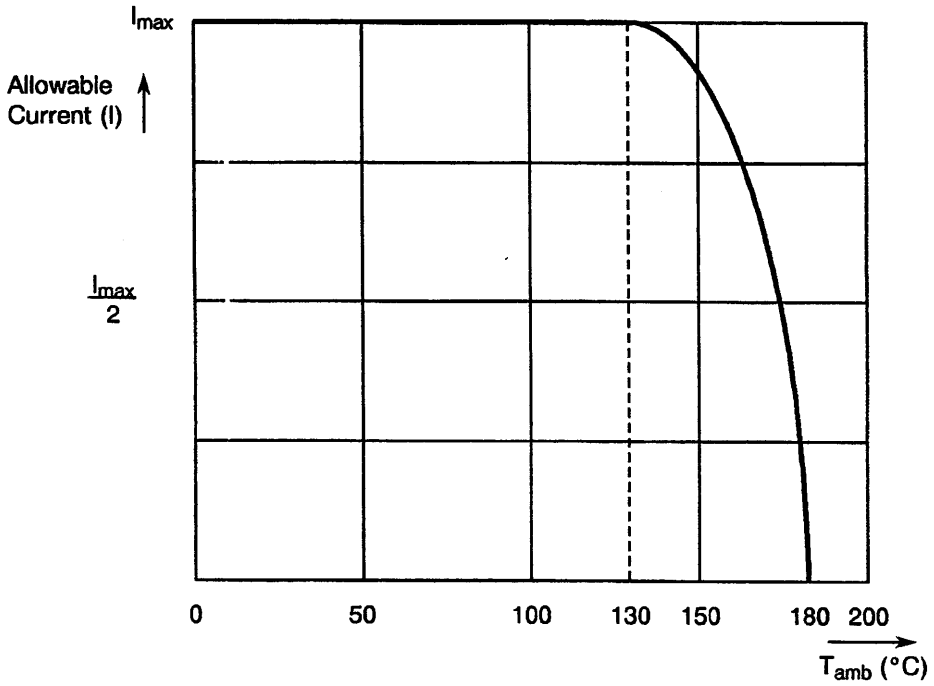

FIGURE 1(b) - MINIMUM SHIELDING EFFECTIVENESS

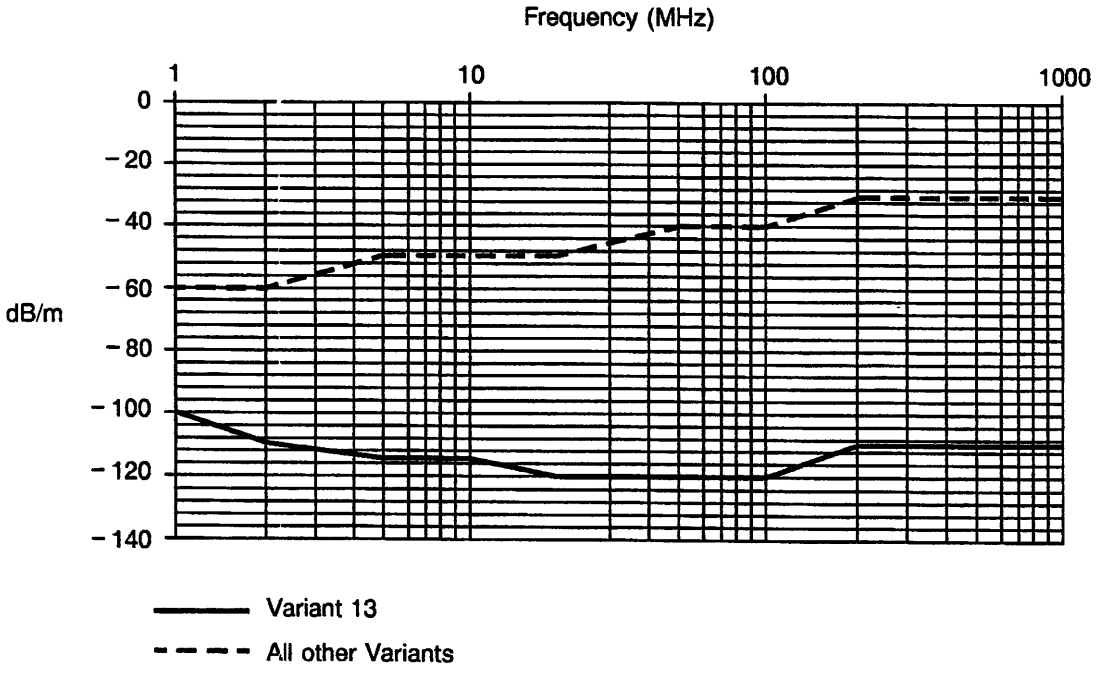

FIGURE 2 - PHYSICAL CHARACTERISTICS

FIGURE 2(a) - COAXIAL CABLE

Minimum Bend Radius	
Variant	mm
03	8.0
04	10
05	20
06	15

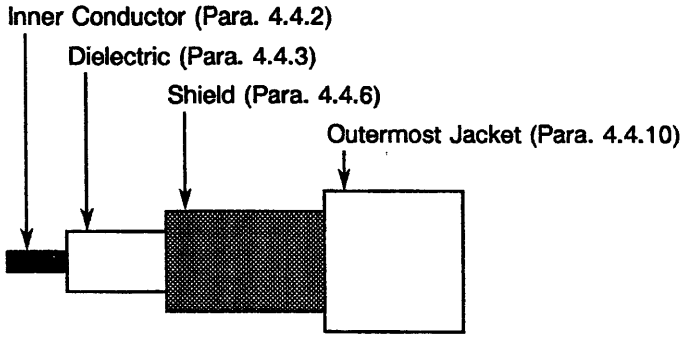

FIGURE 2(b) - TRIAXIAL CABLE

Minimum Bend Radius	
Variant	mm
10	13
11	24
12	35
13	40

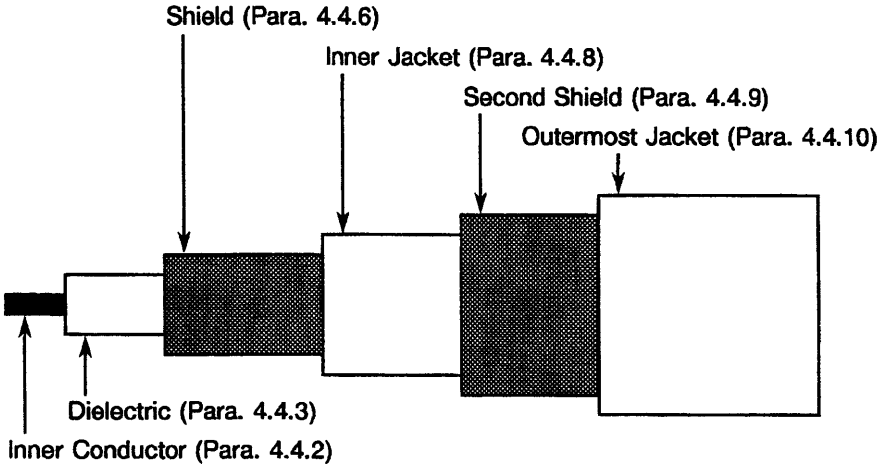

FIGURE 2(c) - BALANCED SHIELDED LINE

Minimum Bend Radius	
Variant	mm
20	20
21	25
22	12.5
23	17.5
24	20
25	27.5

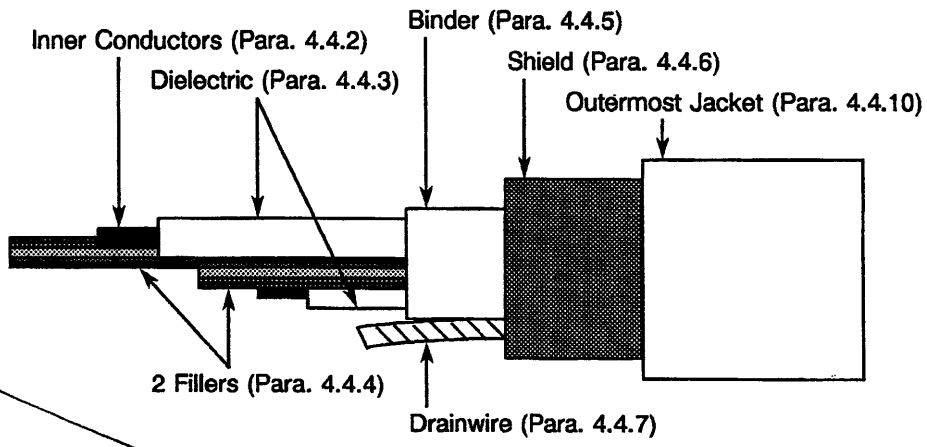

NOTES

1. See Table 1(a) for dimensions.
2. Variant 26 to 30 without Drainwire
3. Variant 26 without Fillers

Variant	mm
26	11
27	14.5
28	15.5
29	19.5
30	24

2. APPLICABLE DOCUMENTS

The following documents form part of this specification and shall be read in conjunction with it:-

(a) ESCC Generic Specification No. 3902, Cables, Coaxial, Radio Frequency, Flexible.

(b) ESA PSS-01-301, Derating Requirements Applicable to Electronic, Electrical and Electro-Mechanical Components.

(c) MIL-C-17, Cables, Radio Frequency, Flexible and Semirigid, General Specification for.

(d) IEC Publication No. 96-1, Radio Frequency Cables, Part 1: General Requirements and Measuring Methods.

(e) GSC-05-2616-00, LAN Triaxcable, 75Ω.

3. TERMS, DEFINITIONS, ABBREVIATIONS, SYMBOLS AND UNITS

For the purpose of this specification, the terms, definitions, abbreviations, symbols and units specified in ESCC Basic Specification No. 21300 and ESCC Generic Specification No. 3902 shall apply. In addition, the following definitions shall be used:-

Cables	=	Datalines (general term).
Cable with 1 shield	=	Coaxial.
Cable with 2 shields	=	Triaxial
Symmetrical Type	=	Balanced Shielded Lines.
WFS	=	Wrapped Foil Shield.
BS	=	Braided Shield.

4. REQUIREMENTS

4.1 GENERAL

The complete requirements for procurement of the finished datalines specified herein shall be as stated in this specification and ESCC Generic Specification No. 3902. Deviations from the Generic Specification, applicable to this Detail Specification only, are listed in Para. 4.2.

Deviations from the applicable Generic Specifications and this Detail Specification, formally agreed with specific Manufacturers on the basis that the alternative requirements are equivalent to the ESCC requirements and do not affect the components' reliability, are listed in the appendices attached to this specification.

4.2 DEVIATIONS FROM GENERIC SPECIFICATION

4.2.1 Deviations from Special In-process Controls

(a) Para. 5.3.1, "Insulation Flaws (Spark Test)": Shall be performed using the following test voltages.

	VARIANT													
	03	04	05	06	10	11	12	13	20	21	22	23	24	25
TEST VOLTAGE (kVAC)	0.9	1.0	1.95	1.75	1.0	1.95	3.15	3.15	2.5	1.0	0.8	1.0	1.0	1.4

	VARIANT				
	26	27	28	29	30
Test Voltage (kVAC)	1.0	1.0	1.0	1.1	1.4

4.2.2 Deviations from Final Production Tests (Chart II)

(a) Para. 9.7, "Voltage Test": To be performed in accordance with Para. 4.8.13 of this specification.

(b) Para. 9.10, "Characteristic Impedance": To be performed in accordance with Para. 4.8.14 of this specification.

(c) Para. 9.11, "Attenuation": To be performed in accordance with Para. 4.8.15 of this specification.

(d) Para. 9.12, "Structural Return Loss": To be performed in accordance with Para. 4.8.16 of this specification.

(e) "Time Delay": Shall be performed in accordance with Para. 4.8.18 of this specification immediately following the measurement of "Attenuation".

(f) "Time Delay Conductor Difference": Shall be performed in accordance with Para. 4.8.19 of this specification immediately following the measurement of "Time Delay".

4.2.3 Deviations from Burn-in and Electrical Measurements (Chart III)

None.

4.2.4 Deviations from Qualification Tests (Chart IV)

(a) Para. 9.7, "Voltage Test": To be performed in accordance with Para. 4.8.13 of this specification.

(b) Para. 9.10, "Characteristic Impedance": To be performed in accordance with Para. 4.8.14 of this specification.

(c) Para. 9.11, "Attenuation": To be performed in accordance with Para. 4.8.15 of this specification.

(d) Para. 9.12, "Structural Return Loss": To be performed in accordance with Para. 4.8.16 of this specification.

(e) "Shielding Effectiveness": Shall be performed in accordance with Para. 4.8.17 of this specification at any point in Chart IV.

4.2.5 Deviations from Lot Acceptance Tests (Chart V)

(a) Para. 9.11, "Attenuation": To be performed in accordance with Para. 4.8.15 of this specification.

(b) Para. 9.12, "Structural Return Loss": To be performed in accordance with Para. 4.8.16 of this specification.

4.3 MECHANICAL REQUIREMENTS

4.3.1 Dimension Check

The dimensions of the datalines specified herein shall be checked. They shall conform to those shown in Table 1(a), Figure 2 and Para. 4.4 of this specification (see the Table following for list of parameters to be checked).

LIST OF PARAMETERS TO BE CHECKED

PARAMETER	TABLE 1(a)	FIGURE 2	PARA. 4.4
COMPOSITION			
Gauge	X		
Number of Conductors	X		
Shielding	X		
Number of Shields and Type		X	
Jacket			X
INNER CONDUCTOR			
Nature			X
Outer Diameter	X		
Number of Strands	X		
Strand Diameter	X		
Silver Thickness			X
Length of Lay			X
DIELECTRIC CORE			
Composition		X	X
Nature			X
Thickness	X		
Concentricity			X
Outer Diameter	X		
SHIELDING			
Number of Strands			X
Type of Shielding			X
Strand Diameter	X		
Tape Thickness			X
Tape Overlap			X
Silver Thickness			X
Shielding Lay			X
Shield Coverage			X
FILLER			
Nature			X
Outer Diameter	X		
BINDER			
Nature		X	X
DRAINWIRE			
See Inner Conductor Composition			X
JACKET			
Composition			X
Thickness			X
Outer Diameter	X		

4.3.2 Weight

The maximum weight of the datalines specified herein shall be measured in accordance with Para. 9.2 of ESCC Generic Specification No. 3902 and shall be as specified in Table 1(a) of this specification.

4.3.3 Adhesion of the Inner Conductor

Minimum stripping force: 1.0N.

4.4 MATERIALS AND FINISHES

The materials and finishes shall be as specified herein. Where a definite material is not specified, a material which will enable the components specified herein to meet the performance requirements of this specification shall be used. Acceptance or approval of any constituent material does not guarantee acceptance of the finished product.

4.4.1 Construction of Datalines

4.4.1.1 Coaxial Cables

The coaxial cables shall be constructed such that an inner conductor shall be centred evenly within its dielectric material. This construction shall be the core to be covered by a braided shield, i.e. outer conductor. This construction is then covered by an outermost jacket in accordance with Figure 2(a).

Inner Conductor	:	Para. 4.4.2.
Dielectric	:	Para. 4.4.3.
Shield	:	Para. 4.4.6.
Jacket	:	Para. 4.4.10.

4.4.1.2 Triaxial Cables

The triaxial cables shall be constructed analogue to the coaxial cables in accordance with Figure 2(b) such that an inner conductor shall be centred evenly within its dielectric material. This construction shall be the core to be covered by a braided shield or inner shield. The inner shield is also called the outer conductor.

This construction is then covered with an inner sheath, that shall provide enough insulating properties so that the inner shield can carry a different potential than the outer shield. For this reason, all electrical tests to be carried out on the outermost jackets are also applicable to this inner sheath.

Usually the outer shield of the triaxial cables shall have the same construction as the shields of the other datalines. For exceptions, see Para. 4.4.9.

Inner Conductor	:	Para. 4.4.2.
Dielectric	:	Para. 4.4.3.
Shield	:	Para. 4.4.6.
Inner Jacket	:	Para. 4.4.8.
Second Shield	:	Para. 4.4.9.
Jacket	:	Para. 4.4.10.

4.4.1.3 Balanced Shielded Lines

The balanced shielded lines, sometimes also called twinax or symmetrical cables, shall also be impedance controlled datalines. They are constructed such that 2 conductors, each evenly centred within its dielectric, are twisted together with 2 fillers and then covered by a shield with drainwire, in accordance with Figure 2(c). This construction is then covered by an outer jacket.

Inner Conductor	:	Para. 4.4.2.
Dielectric	:	Para. 4.4.3.
Filler	:	Para. 4.4.4.
Binder	:	Para. 4.4.5.
Shield	:	Para. 4.4.6.
Drainwire	:	Para. 4.4.7.
Jacket	:	Para. 4.4.10.

NOTES
1. Variant 26 to 30 without Drainwire
2. Variant 26 without Fillers

4.4.1.4 Lay Length of Balanced Shielded Lines

The lay length of all balanced shielded lines shall not be less than 12 times and not more than 16 times the outside diameter of the unshielded and unjacketed cable. This requirement will lead to the following lay length and/or twist per metre respectively.

Variant	Lay Length (mm)		Twists/Metre		Variant	Lay Length (mm)		Twist / Metre	
	Min.	Max.	Min.	Max.		Min.	Max.	Min.	Max.
20	29	38	26	34	26	21	27	37	47
21	50	67	15	20	27	22	30	34	45
22	19	26	38	53	28	27	35	28	37
23	31	42	24	32	29	36	48	21	28
24	38	51	20	26	30	44	57	18	23
25	50	67	15	20					

4.4.2 Inner Conductor

Applicable to coaxial, triaxial cables and balanced shielded lines.

4.4.2.1 Material Characteristics

All strands used in the manufacture of the conductor shall be silver-coated high strength copper alloy for AWG 32 to AWG 24 and silver-coated, soft or annealed, oxygen free, high conductivity copper for AWG 22 and AWG 20.

On silver-coated strands, the thickness of silver shall be 2.0µm minimum.

On all copper conductors, any strand shall show a 10% minimum elongation.

For high strength copper alloy conductors, the tensile characteristics shall be not less than 6.0% in elongation and 35kg/mm^2 in tensile strength.

For determination of the conductor resistance at +20°C, as mentioned in Para. 9.5 of ESCC Generic Specification No. 3902, the α coefficient for copper alloy is 0.0035.

4.4.2.2 Stranding

The conductors shall be constructed of concentrically laid strands so as to produce a smooth and uniform conductor of circular cross-section and free from any high strands or other surface irregularities.

The length of lay of the external layer shall be not less than 8, nor more than 16 times the maximum conductor diameter specified in Table 1(a).

4.4.3 Dielectric

Applicable to coaxial, triaxial cables and balanced shielded lines.

4.4.3.1 Material

Any dielectric material shall be virgin material, i.e. expanded, microporous PTFE or wrapped PTFE with only those additives that are necessary for processing and pigmentation.

Variant	Material
All coaxes and triaxes 21 to ~~25~~ 30	Expanded, microporous PTFE
20	Wrapped PTFE

4.4.3.2 Construction

The dielectric shall have a uniform cross-section throughout the length of the inner core or wire and the conductor shall be evenly centred in the dielectric.

The nominal diameter of the dielectric shall be in accordance with Table 1(a).

4.4.4 Filler

Fillers shall be used only with the balanced shielded lines so as to ensure a smooth and uniform diameter under the shielding in order to contribute to a uniform impedance over the length of the cable.

4.4.4.1 Material

The filler material as used for the balanced shielded lines shall be expanded, microporous PTFE with only those additives necessary for processing.

4.4.4.2 Construction

The filler material shall be extruded or wrapped from tapes to the diameters as given in Table 1(a).

4.4.5 Binder

Applicable to balanced shielded lines ~~only~~ for Variant 22. and Variant 26 to 30

Binders shall be used as appropriate over the 2 twisted insulated wires and fillers of the balanced shielded lines, if necessary.

4.4.5.1 Material

The material shall be virgin, wrapped, expanded, microporous PTFE with only those additives necessary for processing.

4.4.5.2 Construction

The material shall be wrapped with an overlap of 20% maximum.

4.4.6 Shield

The term "first shield" and "second shield" shall be used only for triaxial cables. All other datalines, i.e. the balanced shielded lines and the coaxial cables, have only 1 shield, which is described below.

2 types of shield shall be used:-

(a) Wrapped Foil Shield as part of a second shield for Variant 13.

(b) Braided Shield for all other Variants.

4.4.6.1 Material Characteristics

All strands shall meet the requirements for silver-coated annealed copper as outlined in Para. 4.4.2.1 of this specification, but the thickness of silver shall be 2.5µm minimum.

Any strand shall show a 10% minimum elongation.

4.4.6.2 Construction

The strand size shall be as specified in Table 1(a) of this specification.

(a) **Braided Shield**

The braided shield type shall be of push-back type and provide not less than 90% coverage. The coverage factor K is calculated as follows:-

$$K = (2F - F^2)$$

$$F = \frac{N \times P \times d}{\sin \alpha}$$

$$\tan \alpha = 2\pi \frac{(D \times 2d) \times P}{C}$$

K = coverage (%).
N = number of strands.
d = shield strand diameter (mm).
α = angle of shield with cable axis in degrees.
D = effective diameter of core under shield (mm).
C = number of carriers.
P = serving pitch/mm.

(b) **Wrapped Foil Shield**

The second shield of Variant 13 is superscreened so as to provide extra shielding effectiveness. For this reason, the second shield is constructed with a braided shield over a wrapped foil shield. Between these 2 shields, a graphited PTFE to inhibit abrasion between the two shield layers and increase flexibility of the overall cable is included.

The wrapped foil shield shall be silver plated copper of overall thickness 0.025mm and silver plating of 0.37µm minimum. It shall be wrapped with a 20% overlap.

4.4.7 Drainwire

Applicable to balanced shielded lines.

4.4.7.1 Material Characteristics

Identical with the inner conductor as specified in Para. 4.4.2.1.

4.4.7.2 Stranding

Identical with the inner conductor as specified in Para. 4.4.2.2.

4.4.7.3 Construction

All balanced shielded lines shall have a drain wire placed ~~longitudinally~~ helically along the cable core, directly under the shield, electrically in contact with the braided shield, as specified in Figure 2(c).

4.4.8 Inner Sheath

All trixial cables shall have 2 jackets, the outermost jacket of which shall be as described in Para. 4.4.10 and the inner sheath, dividing the 2 shields from each other, shall be as described in the following. The thickness of the inner sheath shall be 0.13mm minimum.

4.4.8.1 Material

The material shall be virgin extruded PTFE copolymer PFA with only those additives which are necessary for processing, with or without binder, in accordance with Para. 4.4.5.

4.4.8.2 Construction

The material shall be extruded such that the shielded construction underneath is centred evenly within the jacket.

4.4.9 Second Shield

The second shield is applicable only to the triaxial cable and is constructed in the same way as the braided shield of the coaxial cables and the balanced shielded lines. Exceptionally, for Variant 13, the second shield consists of not only the braided shield but additionally a wrapped foil shield underneath (see Para. 4.4.6).

4.4.9.1 Material

The material of the braided second shield of the triaxial cables is exactly the same one as the shield described in Para. 4.4.6.1. The exception is Variant 13 (see Para. 4.4.6.2).

4.4.9.2 Construction

The construction of the braided second shield of the triaxial cables is exactly the same as the one described in Para. 4.4.6.2(a).

The wrapped foil shield of the second shield of Variant 13 is placed underneath the braided shield, between inner jacket and outer jacket. Its construction is in accordance with Para. 4.4.6.2(c).

4.4.10 Jacket

All triaxial cables shall have 2 jackets, the outermost jacket of which shall be as described in the following with the jacket of the coaxial cables and the balanced shielded lines. For the description of the inner sheath of the triaxial cables, see Para. 4.4.8. The thickness of the jacket shall be 0.13mm minimum

4.4.10.1 Material

The material shall be virgin material, i.e. extruded PTFE copolymer PFA as standard jacket material or expanded, microporous PTFE underneath for Variant 13, each with only those additives that are necessary for processing and pigmentation.

4.4.10.2 Construction

For Variant 13 where, for flexibility reasons, expanded PTFE is used under the extruded PFA, the material shall be wrapped in 2 wraps, each with a minimum overlap of 52%.

The extruded PTFE/PFA shall be extruded such that the construction underneath is centred evenly within the jacket.

4.4.11 Colour Coding

The dielectric material of all coaxial and triaxial cables and the fillers of the balanced shielded lines shall have the natural colour of its material.

4.4.11.1 Coaxial Cable Colour Coding

The colour of the jackets of the coaxial cables shall be as follows.

COAXIAL CABLE COLOUR CODING

Variant	AWG Size	Impedance (Ω)	Colour of Jacket
03	28	50	White
04	26	50	Orange
05	20	50	Green
06	26	75	Black

4.4.11.2 Triaxial Cable Colour Coding

The colour of the jackets of the triaxial cables shall be as follows.

TRIAXIAL CABLE COLOUR CODING

Variant	AWG Size	Impedance (Ω)	Colour of Jacket
10	26	50	Orange
11	20	50	Green
12	20	75	White/Natural
13	20	75	White

4.4.11.3 Balanced Shielded Line Colour Coding

The colour of the jackets of the balanced shielded lines shall be as follows.

COLOUR CODING OF BALANCED SHIELDED LINES

Variant	AWG Size	Impedance (Ω)	Colour of Single Wires	Colour of Jacket
20	24	75	Black/White	Black
21	22	100	Red/Blue	Red
22	30	120	White	Blue
23	28	120	White	Green
24	26	120	Red/Blue	Blue
25	24	120	Red/Blue	Grey
26	30	100	White	Blue
27	28	100	White	Green
28	26	100	White	Blue
29	24	100	White	Grey
30	22	100	White	Red

4.5 MARKING

4.5.1 General

The marking of all spools of finished datalines delivered to this specification shall be in accordance with the requirements of ESCC Basic Specification No. 21700. Each spool shall be marked in respect of:-

(a) The ESCC Component Number.

(b) Characteristics.

(c) Traceability Information.

(d) Additional Marking.

4.5.2 The ESCC Component Number

Each component shall bear the ESCC Component Number which shall be constituted and marked as follows:

390200203B

Detail Specification Number

Type Variant (see Table 1(a))

Testing Level

4.5.3 Characteristics

The characteristics shall show the length(s) of the finished dataline wound on each spool and shall be marked as follows:-

100m

Length in Metres (see Note)

Symbol for Metres

N.B.

Whenever the length is less than 100 metres, insert a zero in the first block (example: 075m). If more then 1 length of finished dataline is wound on a spool, the characteristics of each length shall be marked as above.

4.5.4 Traceability Information

Each spool shall be marked in respect of traceability information in accordance with the requirements of ESCC Basic Specification No. 21700.

4.5.5 Additional Marking

Each spool shall bear the Manufacturer's Quality Control Inspector's stamp.

4.6 ELECTRICAL MEASUREMENTS

4.6.1 Electrical Measurements at Room Temperature

The parameters to be measured at room temperature are scheduled in Table 2. Unless otherwise specified, the measurements shall be performed at T_{amb} = +22 ± 3 °C.

4.6.2 Electrical Measurements at High and Low Temperatures

Not applicable.

4.6.3 Circuits for Electrical Measurements

Not applicable.

4.7 BURN-IN TESTS

Not applicable.

4.8 ENVIRONMENTAL AND ENDURANCE TESTS (CHARTS IV AND V OF ESCC GENERIC SPECIFICATION NO. 3902)

4.8.1 Mechanical Properties of Conductor

As detailed in Paras. 4.4.2.1, 4.4.6.1, 4.4.7.1 and 4.4.9.1 of this specification.

4.8.2 Alternate Bending Resistance

The applied weights and bending diameter for alternate bending resistance are given in Table A.

Number of cycles : 500 minimum.

TABLE A - ALTERNATE BENDING RESISTANCE, LOAD AND DIAMETER

Variant	Z_0 (Ω)	Weight (kg)	Bending Diameter (mm)
03	50	0.25	15
04	50	0.25	20
05	50	0.50	40
06	75	0.25	30
10	50	0.25	25
11	50	0.50	50
12	75	0.50	70
13	75	0.50	80
20	75	0.50	40
21	100	1.00	50
22	120	0.50	25
23	120	0.50	35
24	120	0.50	40
25	120	0.80	55

4.8.3 Accelerated Ageing Stability

Ageing temperature : +200 ± 5 °C.
Shrinkage/Protrusion : See Table B.
Wrap Test : Mandrel diameters as per Table C.

TABLE B - SHRINKAGE/PROTRUSION

Variant	Z_0 (Ω)	Max. Shrinkage or Protrusion (mm)
12	75	3.0
13	75	3.0
All others		2.0

Maximum Capacitance Change : +7.0%.
Maximum Attenuation Change : +7.0%.
Maximum Structural Return Loss Change : −10%.

Variant	Z_0 (Ω)	Weight (kg)	Bending Diameter (mm)
26	100	0,40	20
27	100	0,50	25
28	100	0,50	30
29	100	0,75	45
30	100	1,00	50

4.8.4 Cold Bend Test

Chamber temperature : -80 ± 5 °C.
Mandrel diameter and load : See Table C.

TABLE C - COLD BEND TEST, MANDREL DIAMETERS AND LOADS

Variant	Z_0 (Ω)	Weight (kg)	Mandrel Diameter (mm)
03	50	0.25	15
04	50	0.25	20
05	50	0.50	40
06	75	0.25	30
10	50	0.25	25
11	50	0.50	50
12	75	1.3	70
13	75	0.50	80
20	75	0.50	40
21	100	1.00	50
22	120	0.30	25
23	120	0.50	35
24	120	0.50	40
25	120	0.90	55

4.8.5 Solderability

No particular conditions are applicable.

4.8.6 Corona Extinction Voltage

As per Table 2.

4.8.7 Resistance to Fluids

No particular conditions are applicable.

4.8.8 Flammability Resistance

No particular conditions are applicable.

4.8.9 Radiation Resistance

(a) Insulation Resistance : Shall stay within specified limits, see Table 2.
(b) Voltage Test : Shall stay within specified limits, see Table 2.
(c) Maximum Capacitance Change : +7.0%.
(d) Maximum Impedance Change : +7.0%.
(e) Corona extinction voltage : Shall stay within specified limits, see Table 2.

Variant	Z_0 (Ω)	Weight (kg)	Mandrel Diameter (mm)
26	100	~~0,25~~ 0,25	25
27	100	0,30	25
28	100	0,40	30
29	100	0,70	50
30	100	0,90	55

4.8.10 Outgassing

No particular conditions are applicable.

4.8.11 Long-term Ageing Test

Ageing temperature : +180±5 °C.

(a) Insulation Resistance : Shall stay within specified limits, see Table 2.

(b) Voltage Test : Shall stay within specified limits, see Table 2.

(c) Maximum Capacitance Change : +7.0%.

(d) Maximum Impedance Change : +7.0%.

(e) Corona extinction voltage : Shall stay within specified limits, see Table 2.

4.8.12 Atomic Oxygen Resistance

The outer surface of the datalines is resistant against atomic oxygen and shall be verified in accordance with the requirements of the Qualifying Space Agency (Q.S.A.).

4.8.13 Voltage Test

The voltage test shall be performed in accordance with ESCC Generic Specification No. 3902, Para. 9.7.

4.8.14 Characteristic Impedance

The characteristic impedance of all coaxes and triaxes shall be measured according to ~~MIL-C-17,~~ MIL-DTL-17 Para. 4.8.7 using a time domain reflectometer (T.D.R.). All balanced shielded lines shall be measured according to MIL-C-17, Para. 4.8.7 using a T.D.R. with a symmetrical input/output. All measurements shall be performed on cables with a minimum length of 3.0 metres.

Impedance reference shall be defined before test.

4.8.15 Attenuation

Minimum measurement length ≥ 15 metres.

Connectors, precision adaptors and symmetrical transformers shall be defined before the test.

TABLE D1 - MAXIMUM ATTENUATION OF COAXIAL AND TRIAXIAL CABLES

Variant	Attenuation in dB/100m				
	10MHz	50MHz	100MHz	500MHz	1.0GHz
03	15	34	48	108	154
04, 10	12	26	37	84	119
05, 11	5.5	12	17	38	55
06	6.8	14	20	45	64
12, 13	2.9	6.6	9.3	22	32

TABLE D2 - MAXIMUM ATTENUATION OF BALANCED SHIELDED LINES

Variant	Attenuation in dB/100m		
	10MHz	50MHz	100MHz
20	12	28	40
21	7.0	17	24
22	15	35	48
23	12	26	38
24	9.0	20	29
25	7.0	16	22

All other attenuation values for frequencies other than those specified above may be calculated according to the following (rounded) formula:

$$\alpha \text{ new} = \alpha \text{ old} \times \sqrt{\frac{f \text{ new}}{f \text{ old}}}$$

4.8.16 Structural Return Loss

To be performed on coaxes and triaxes only with a minimum measurement length of 15 metres.

Connectors and precision adaptors shall be defined before the test.

Frequency : Up to 1.0GHz.
Minimum Structural Return Loss : See Table 2.

4.8.17 Shielding Effectiveness

The shielding effectiveness of the cables shall be determined. Since the shielding effectiveness or transfer impedance respectively is a characteristic which is dependent only on constructional parameters, its performance shall be measured only once during qualification in accordance with IEC 96-1, 46 A 142 and Figure 1(b) of this specification.

4.8.18 Time Delay

The time delay of the balanced shielded lines shall be measured in accordance with Table 2 using a network analyser on a minimum length of 3.0 metres.

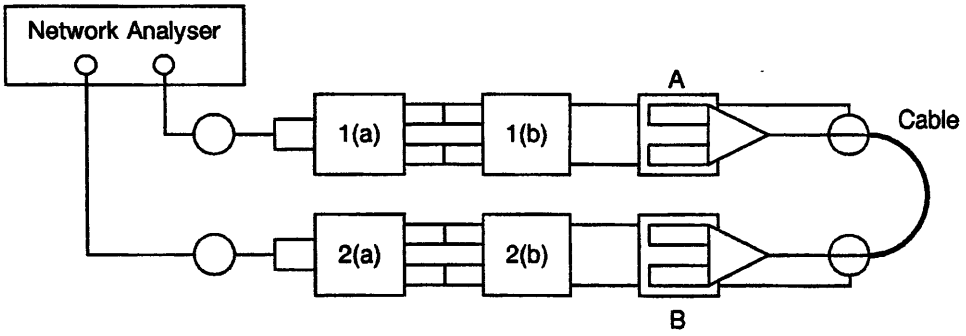

1(a) and 2(a) : Symmetrical Transformers (1×50Ω to 2×50Ω)
1(b) and 2(b) : Impedance Matching (50Ω to 75/100/120Ω)
A and B : Clamp connection

Variant	Attenuation in dB/100m			
	20 MHz	35 MHz	80 MHz	100 MHz
26	25	33	50	54
27	20	26	38	43
28	17	22	32	36
29	11	15	22	25
30	9	12	17	20

A symmetrical 50Ω signal will be produced by the network analyser (0.3 - 3000 MHz), split into 2 symmetrical signals 1(a) and transformed to the desired impedance of the balanced shielded line under test 1(b). After the signal has passed the cable under measurement, the signal will be impedance matched to 50Ω 2(b) and retransformed to a single signal 2(a).

The specimen cable is connected to input and output A and B, and the time delay between input and output is measured and displayed by the network analyser.

4.8.19 Time Delay Conductor Difference

The time delay conductor difference of the balanced shielded lines shall be measured in accordance with Table 2 using a network analyser on a minimum length of 3.0 metres.

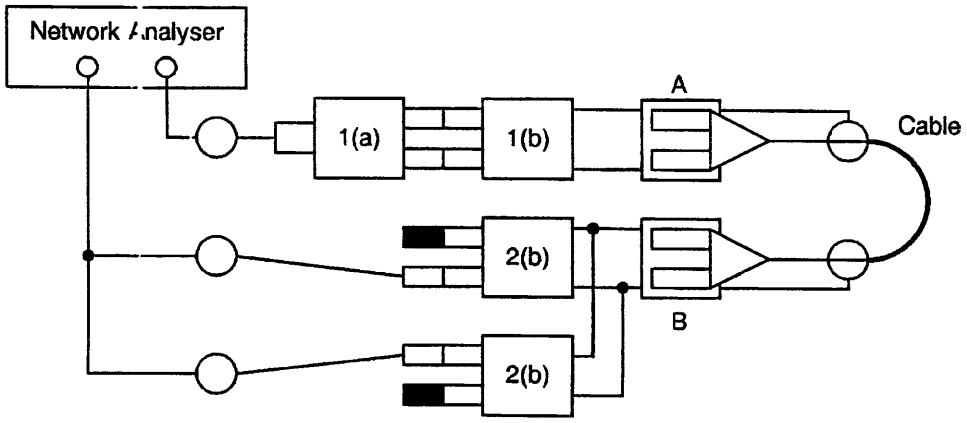

1(a) : Symmetrical Transformers (1×50Ω to 2×50Ω)
1(b) and 2(b) : Impedance Matching (50Ω to 75/100/120Ω)
A and B : Clamp connection

A symmetrical 50Ω signal will be produced by the network analyser (0.3 - 3000 MHz), split into 2 symmetrical signals 1(a) and transformed to the desired impedance of the balanced shielded line under test 1(b). After the signal has passed 1 line of the symmetrical cable, connected to input A and output B, the signal will be impedance matched to 50Ω 2(b). The 1 open port of the impedance matching pad will be terminated by 50Ω.

This procedure shall be repeated for the second single line of the symmetrical cable, and both values shall be compared, with the conductor difference displayed by the network analyser.

TABLE 2(a) - ELECTRICAL MEASUREMENTS AT ROOM TEMPERATURE - COAXIAL AND TRIAXIAL CABLES

Variant	ESCC Gen. Spec. No. 3902				
	Para. 9.6	Para. 9.7	Para. 9.9	Para. 9.10	Para. 9.20
	No. 1	No. 2	No. 3	No. 4	No. 5
	Characteristic Diel. Strength of Jacket (kVac)	Characteristic Voltage Test (Diel. Core) (kVdc)	Characteristic Capacitance (Max.) (pF/m)	Characteristic Impedance (Ω)	Characteristic Corona Extinction Voltage (Vac)
03	1.0	1.2	89	50 ± 5	360
04	1.0	1.4	89	50 ± 5	400
05	1.0	2.8	89	50 ± 5	600
06	1.0	2.5	60	75 ± 5	500
10	1.0	1.4	89	50 ± 5	400
11	1.0	2.8	89	50 ± 5	600
12	1.0	4.5	60	75 ± 5	600
13	1.0	4.5	60	75 ± 5	600

No.	Characteristic	ESCC Gen. 3902	This Specification	Limits
6	Inner Conductor Resistance	Para. 9.5	-	See Table 1(a)
7	Insulation Resistance	Para. 9.8	-	5000MΩ × km
8	Attenuation	Para. 9.11	Para. 4.8.15	See Table D1
9	Structural Return Loss	Para. 9.12	Para. 4.8.16	19dB min
10	Shielding Effectiveness	-	Para. 4.8.17	See Figure 1(b)

TABLE 2(b) - ELECTRICAL MEASUREMENTS AT ROOM TEMPERATURE - BALANCED SHIELDED LINE

Variant	ESCC Gen. Spec. No. 3902					
	Para. 9.6	Para. 9.7	Para. 9.9		Para. 9.10	Para. 9.20
	No. 1	No. 2	Characteristic Capacitance (Max.) (pF/m)		No. 5	No. 6
	Characteristic Diel. Strength of Jacket (kVac)	Characteristic Voltage Test (Diel. Core) (kVdc)	No. 3 Cond to Cond	No. 4 Cond to Shield	Characteristic Impedance (Ω)	Characteristic Corona Extinction Voltage (Vac)
20	1.0	3.5	68	120	75 ± 5	600
21	1.0	1.6	45	79	100 ± 7	500
22	1.0	1.0	41	72	120(−4+8)	500
23	1.0	1.3	41	72	120(−4+8)	500
24	1.0	1.5	41	72	120(−4+8)	500
25	1.0	2.0	41	72	120(−4+8)	800
26	1.0	1,1	47	79	100 (± 6)	500
27	1.0	1,2	47	79	100 (± 6)	500
28	1.0	1,3	47	79	100 (± 6)	500
29	1.0	1.6	47	79	100 (± 6)	500
30	1.0	2.0	47	79	100 (± 6)	500

No.	Characteristic	ESCC Gen. 3902	This Specification	Limits
7	Inner Conductor Resistance	Para. 9.5	-	See Table 1(a)
8	Insulation Resistance	Para. 9.8	-	5000MΩ×km
9	Attenuation	Para. 9.11	Para. 4.8.15	See Table D2
10	Shielding Effectiveness	-	Para. 4.8.17	See Figure 1(b)

Variant	Z_0	This Specification	
		Para. 4.8.18	Para. 4.8.19
		No. 11	No. 12
	(Ω)	Characteristic Time Delay (Max.) (nsec/m)	Characteristic Conductor Time Delay Difference (Max.) (nsec/m)
20	75	4.8	0.1
21	100	4.3	0.1
22	120	4.3	0.1
23	120	4.3	0.1
24	120	4.3	0.1
25	120	4.3	0.1

Variant	Z_0	This Specification	
		Para. 4.8.18	Para. 4.8.19
		No. 11	No. 12
	(Ω)	Characteristic Time Delay (Max.) (nsec/m)	Characteristic Conductor Time Delay Difference (Max.) (nsec/m)
26	100	4,3	0.1
27	100	4,3	0.1
28	100	4,3	0.1
29	100	4,3	0.1
30	100	4,3	0.1
—	—	—	—

ANNEX I

EQUIVALENCE OF RG NUMBERS AND MIL-C-17 DETAIL SPECIFICATION

ESCC Det. Spec. 3902/002				RG	MIL-C-17/...acc. to Supplement 1		
Variant	Type	Z_0 (Ω)	AWG		Initial Spec. Number	Current Spec. Number	Connector Proposal
03	Coaxial	50	28	-	-	-	SMA, SMB, SMC
04	Coaxial	50	26	174 + 174A 188 + 188A 316	119 69 113	173 113 172	SMA, SMB, SMC
05	Coaxial	50	20	141A 303	59 111	170 -	TNC, BNC
11	Triaxial	50	20	38 142 + 142A + 142B 400	60 - 128	158 - 175	TNC, BNC, SMA
12	Triaxial	75	20	216	77	-	N
13	Triaxial	75	20	-	-	-	ESCC 3401/056 with insert 17-1T and 25-2T

APPENDIX 'A'

AGREED DEVIATIONS FOR W.L. GORE AND ASSOCIATES GmbH (D)

ITEMS AFFECTED	DESCRIPTION OF DEVIATIONS
Para. 4.2.2	Para. 9.14, Anthony and Brown Test: May be performed as the last test in Chart II.
Paras. 4.4.3 to 4.4.5 and 4.4.10	Expanded PTFE shall be GORE-TEX®.

NOTES

1. GORE-TEX® = Registered Trade Mark of Gore.