WIRES AND CABLES, ELECTRICAL,

600V, LOW FREQUENCY

ESCC Generic Specification No. 3901

Issue 6	October 2026

Document Custodian: European Space Agency – see https://escies.org

LEGAL DISCLAIMER AND COPYRIGHT

European Space Agency, Copyright © 2026. All rights reserved.

The European Space Agency disclaims any liability or responsibility, to any person or entity, with respect to any loss or damage caused, or alleged to be caused, directly or indirectly by the use and application of this ESCC publication.

This publication, without the prior permission of the European Space Agency and provided that it is not used for a commercial purpose, may be:

- copied in whole, in any medium, without alteration or modification.
- copied in part, in any medium, provided that the ESCC document identification, comprising the ESCC symbol, document number and document issue, is removed.

DOCUMENTATION CHANGE NOTICE

(Refer to https://escies.org for ESCC DCR content)

DCR No.	CHANGE DESCRIPTION
1814 & 1818	Specification upissued to incorporate changes per DCR.

TABLE OF CONTENTS

1	INTRODUCTION	8
1.1	SCOPE	8
1.2	APPLICABILITY	8
2	APPLICABLE DOCUMENTS	8
2.1	ESCC SPECIFICATIONS	8
2.2	OTHER (REFERENCE) DOCUMENTS	9
2.3	ORDER OF PRECEDENCE	9
3	TERMS, DEFINITIONS, ABBREVIATIONS, SYMBOLS AND UNITS	9
4	REQUIREMENTS	10
4.1	GENERAL	10
4.1.1	Specifications	10
4.1.2	Conditions and Methods of Test	10
4.1.3	Manufacturer's Responsibility for Performance of Tests and Inspections	10
4.1.4	Inspection Rights	10
4.1.5	Pre-encapsulation Inspection	10
4.2	QUALIFICATION APPROVAL REQUIREMENTS ON A MANUFACTURER	11
4.3	DELIVERABLE COMPONENTS	11
4.3.1	Lot Failure	11
4.3.2	Testing and Lot Acceptance Levels	11
4.4	MARKING	12
4.5	MATERIALS AND FINISHES	12
5	PRODUCTION CONTROL	12
5.1	GENERAL	12
5.2	PROTECTION OF SILVER-PLATED STRANDS	12
5.2.1	Packaging of Individual Wire Strands	12
5.2.2	Processed Strands and Braids	12
5.3	SPECIAL IN-PROCESS CONTROLS	12
5.3.1	Insulation Flaws (Spark Test)	12
5.3.2	Microsectioning of Strands	13
6	FINAL PRODUCTION TESTS	15
6.1	GENERAL	15
6.2	TEST METHODS AND CONDITIONS	15
6.3	FAILURE CRITERIA	15
6.3.1	Parameter Limit Failure	15
6.3.2	Other Failures	15
6.4	FAILED COMPONENTS	15
6.5	LOT FAILURE	15

6.6 DOCUMENTATION 16
7 BURN-IN AND ELECTRICAL MEASUREMENTS (CHART III) 16
8 QUALIFICATION APPROVAL AND LOT ACCEPTANCE TESTS 16
8.1 QUALIFICATION TESTING 16
8.1.1 General 16
8.1.2 Distribution within the Qualification Test Lot 16
8.2 LOT ACCEPTANCE TESTING 16
8.2.1 General 16
8.2.2 Distribution within the Sample for Lot Acceptance Testing 17
8.2.3 Lot Acceptance Level 3 Testing (LA3) 17
8.2.4 Lot Acceptance Level 2 Testing (LA2) 17
8.2.5 Lot Acceptance Level 1 Testing (LA1) 17
8.3 FAILURE CRITERIA 17
8.3.1 Environmental and Mechanical Test Failures 17
8.3.2 Electrical Failures 17
8.3.3 Other Failures 18
8.4 FAILED COMPONENTS 18
8.5 LOT FAILURE 18
8.6 DOCUMENTATION 18
9 TEST METHODS AND PROCEDURES 22
9.1 EXTERNAL VISUAL INSPECTION 22
9.2 WEIGHT 22
9.3 DIMENSIONS 22
9.4 COATING TESTS (CONDUCTOR AND SHIELD STRANDS) 23
9.4.1 Silver-coated Wires 23
9.4.2 Other Coatings 23
9.5 CONDUCTOR RESISTANCE 23
9.6 SPARK TEST 24
9.6.1 Dry Test 24
9.6.2 Dry Impulse Test 24
9.7 VOLTAGE TEST 24
9.8 INSULATION RESISTANCE 25
9.9 STRIPPING CAPABILITY 25
9.10 ANTHONY AND BROWN TEST (ONLY APPLICABLE TO SILVER-PLATED WIRES) 25
9.11 MECHANICAL PROPERTIES OF CONDUCTOR (FED-STD-228-3211) 26
9.12 ACCELERATED AGEING 26
9.12.1 Finished Wires 26

9.12.2 Shielded and Jacketed Cables 26
9.13 WRAP TEST AT AMBIENT TEMPERATURE 27
9.14 VOLTAGE TEST 27
9.15 SHRINKAGE 27
9.16 BLOCKING 28
9.17 COLD BEND TEST 28
9.18 CUT-THROUGH RESISTANCE 28
9.19 NOTCH RESISTANCE 29
9.20 NOT APPLICABLE 29
9.21 RESISTANCE TO FLUIDS 29
9.22 SURFACE RESISTANCE (FED-STD-228-6041) 30
9.23 ABRASION RESISTANCE 30
9.24 SOLDERING SHRINKAGE 31
9.25 SOLDERABILITY 31
9.26 RADIATION RESISTANCE 31
9.27 OVERLOAD RESISTANCE 32
9.27.1 Object of Test 32
9.27.2 Test Procedure 32
9.28 LONG-TERM AGEING TEST 32
10 DATA DOCUMENTATION 33
10.1 GENERAL 33
10.1.1 Qualification Approval 33
10.1.2 Testing Level 'B' 33
10.1.2.1 QUALIFIED COMPONENTS 33
10.1.2.2 UNQUALIFIED COMPONENTS 33
10.1.3 Testing Level 'C' 33
10.1.4 Data Retention/Data Access 34
10.2 COVER SHEET(S) 34
10.3 LIST OF EQUIPMENT USED 34
10.4 LIST OF TEST REFERENCES 34
10.5 SPECIAL IN-PROCESS CONTROL DATA 34
10.6 FINAL PRODUCTION TEST DATA (CHART II) 34
10.7 BURN-IN AND ELECTRICAL MEASUREMENT DATA (CHART III) 34
10.8 QUALIFICATION TEST DATA (CHART IV) 35
10.9 LOT ACCEPTANCE TEST DATA (CHART V) 35
10.9.1 Testing Level 'B' 35
10.9.2 Testing Level 'C' 35

10.10 FAILED COMPONENTS LIST AND FAILURE ANALYSIS REPORT 35
10.11 CERTIFICATE OF CONFORMITY 35
11 DELIVERY 35
12 PACKAGING AND DESPATCH 36

1 INTRODUCTION

1.1 SCOPE

This specification defines the general requirements for the qualification approval, procurement, including lot acceptance testing, and delivery of Wires and Cables, Electrical, 600V, Low Frequency, for space application.

This specification contains the appropriate inspection and test schedules and also specifies the data documentation requirements.

1.2 APPLICABILITY

This specification is primarily applicable to the granting of qualification approval to a component in accordance with ESCC Basic Specification No. 20100 and the procurement of such components from qualified Manufacturers.

2 APPLICABLE DOCUMENTS

The following documents form part of, and shall be read in conjunction with, this specification. The relevant issues shall be those in effect on the date of placing the purchase order.

2.1 ESCC SPECIFICATIONS

- No. 20100, Requirements for the Qualification of Standard Electronic Components for Space Application.
- No. 20500, External Visual Inspection.
- No. 20600, Preservation, Packaging and Despatch of ESCC Electronic Components.
- No. 21300, Terms, Definitions, Abbreviations, Symbols and Units.
- No. 21700, General Requirements for the Marking of ESCC Components.
- No. 22800, ESCC Non-conformance Control System.
- No. 24600, Minimum Quality System Requirements.

With the exception of ESCC Basic Specifications Nos. 20100, 21700, 22800 and 24600, where Manufacturers' specifications are equivalent to, or more stringent than, the ESCC Basic Specifications listed above, they may be used in place of the latter, subject to the approval of the ESCC Executive.

Such replacements shall be clearly identified in the applicable Process Identification Document (PID) and listed in an Appendix to the appropriate Detail Specification.

Unless otherwise stated herein, references within the text of this specification to "the Detail Specification" shall mean the relevant ESCC Detail Specification.

2.2 OTHER (REFERENCE) DOCUMENTS

- IEC Publication No. 68, Basic Environmental Testing Procedures.
- FED-STD-228, Cables and Wires, Insulated, Methods of Sampling and Testing.
- ASTM B 298-74, Silver-coated Soft or Annealed Copper Wire.
- ECSS-Q-ST-70-02, Thermal vacuum outgassing test for the screening of space materials.
- MIL-PRF-26536, Propellant, Hydrazine.
- MIL-PRF-26539, Propellant, Nitrogen Tetroxide.
- ECSS-Q-ST-70-20, Determination of the susceptibility of silver-plated copper wire and cable to "red-plague" corrosion.
- ECSS-Q-ST-70-21, Flammability testing for the screening of space materials.
- ECSS-Q-ST-70-29, The determination of off-gassing products from materials and assembled articles to be used in a manned space vehicle crew compartment.

2.3 ORDER OF PRECEDENCE

For the purpose of interpretation and in case of conflict with regard to documentation, the following order of precedence shall apply:

(a) ESCC Detail Specification.
(b) ESCC Generic Specification.
(c) ESCC Basic Specification.
(d) Other documents, if referenced herein.

3 TERMS, DEFINITIONS, ABBREVIATIONS, SYMBOLS AND UNITS

The terms, definitions, abbreviations, symbols and units specified in ESCC Basic Specification No. 21300 shall apply. Furthermore, the following terms and definitions shall apply:

- Finished Wire: A single insulated conductor.
- Cable: Any construction other than that of a finished wire(s) with or without shielding or with or without an outer jacket.
- Core: Any finished wire in a cable.

  N.B.
  The term ‘single core cable’, unshielded and non-jacketed may be used instead of the term ‘finished wire’.
  In this specification, the term ‘component’ is used instead of ‘finished wire’ and/or ‘cable’.

- The production lot of individual silver-plated strands shall consist of the total length of strand of one size being finally available in one continuous length, or in various pieces, which has been drawn to its final dimensions in one continuous process.

- The production lot of finished wire shall consist of the total length of wire being finally available either in one continuous length, or in separate pieces, which has been produced successively:
  - In one continuous process for stranding of the conductor.
  - In one continuous process for wrapping and heat-sealing of tapes.
  - In one continuous process for application of the top coat.

  Wire lengths, which have been separated for practical reasons or, for instance, because of partial failure of the insulation during the Impulse Dielectric Test, shall be considered to belong to the same production lot.

- The production lot of finished cables shall consist of the total length of cable which has been produced successively:
  - In one continuous process for twisting of wires.
  - In one continuous process for the application of the shield.
  - In one continuous process for wrapping and heat-sealing of tapes.

  Cable lengths, which have been separated for practical reasons or because of partial failure of the jacket during the Spark Test, shall be considered to belong to the same production lot.
- The term 'Continuous Process' as used above is defined as a manufacturing operation which may have been discontinued for standard or routine interruptions only, but not for disruptions which require resetting of machines or process parameters.

4 REQUIREMENTS

4.1 GENERAL

The test requirements for qualification approval of a component shall comprise final production tests (see Chart II), and qualification testing (see Chart IV).

The test requirements for procurement of components shall comprise final production tests (Chart II), together with, when applicable, a level of lot acceptance testing (see Chart V) to be specified by the Orderer.

If a Manufacturer elects to eliminate a final production test by substituting an in-process control or statistical process control procedure, the Manufacturer is still responsible for delivering components that meet all of the performance, quality and reliability requirements defined in this specification and the Detail Specification.

4.1.1 Specifications

For qualification approval, procurement (including lot acceptance testing) and delivery of components in conformity with this specification, the specifications listed in Section 2 of this document shall apply in total unless otherwise specified herein or in the Detail Specification.

4.1.2 Conditions and Methods of Test

The conditions and methods of test shall be in accordance with this specification, the ESCC Basic Specifications referenced herein and the Detail Specification.

4.1.3 Manufacturer's Responsibility for Performance of Tests and Inspections

The Manufacturer shall be responsible for the performance of tests and inspections required by the applicable specifications. These tests and inspections shall be performed at the plant of the Manufacturer of the components unless it is agreed by the ESCC Executive prior to commencing qualification testing, or procurement, to use an approved external facility.

4.1.4 Inspection Rights

The ESCC Executive (for qualification approval or for a procurement) reserves the right to monitor any of the tests and inspections scheduled in the applicable specifications.

4.1.5 Pre-encapsulation Inspection

Not applicable.

4.2 QUALIFICATION APPROVAL REQUIREMENTS ON A MANUFACTURER

To obtain and maintain the qualification approval of a component, or family of components, a Manufacturer shall satisfy the requirements of ESCC Basic Specification No. 20100.

4.3 DELIVERABLE COMPONENTS

Components delivered to this specification shall be processed and inspected in accordance with the relevant Process Identification Document (PID). Each delivered component shall be traceable to its production lot. Components delivered to this specification shall have completed satisfactorily all tests to the testing level and lot acceptance level specified in the purchase order (see Para. 4.3.2).

ESCC qualified components delivered to this specification shall be produced from lots that are capable of passing all tests, and sequences of tests, that are defined in Charts IV and V. The Manufacturer shall not knowingly supply components that cannot meet this requirement. In the event that, subsequent to delivery and prior to operational use, a component is found to be in a condition such that it could not have passed these tests at the time of manufacture, this shall be grounds for rejection of the delivered lot.

4.3.1 Lot Failure

Lot failure may occur during final production tests (Chart II), qualification testing (Chart IV) or lot acceptance testing (Chart V).

Should such failure occur, the non-conformance procedure shall be initiated in accordance with ESCC Basic Specification No. 22800.

Should such failure occur during procurement, the Manufacturer shall notify the Orderer by telex within 2 working days, giving details of the number and mode of failure and the suspected cause.

In the case where qualification approval has been granted to the component, he shall, at the same time by the same means, inform the ESCC Executive in order that the latter may consider its implications.

No further testing shall be performed on the failed components except on instruction from the Orderer. The Orderer shall inform the Manufacturer and the ESCC Executive within 2 working days of receipt of the telex, by the same means, what action shall be taken.

In the case when lot failure occurs during qualification testing, the Manufacturer shall immediately notify the ESCC Executive who will define a course of action to be followed. No further testing shall be performed on the failed components.

4.3.2 Testing and Lot Acceptance Levels

This specification defines 1 level of testing severity which is designated by the letter ‘B’ (see Chart I) and 3 levels of lot acceptance testing (see Chart V).

The lot acceptance levels are designated 1, 2 and 3 and are comprised of tests as follows:

Level 3 (LA3) - None

Level 2 (LA2) - Electrical and Environmental Subgroup

Level 1 (LA1) - Endurance Subgroup plus Electrical and Environmental Subgroup

The required testing level and lot acceptance level shall both be specified in a purchase order.

4.4 MARKING

All components procured and delivered to this specification from a source qualified according to ESCC Basic Specification No. 20100 shall be marked in accordance with ESCC Basic Specification No. 21700. Thus, they shall bear the ESA symbol to signify their conformance to the ESCC qualification approval requirements and full compliance with the requirements of this specification and the Detail Specification.

Components procured from sources which are not ESCC qualified, provided that they fully comply with the procurement requirements of this specification and the Detail Specification, may bear the ESCC marking **with the exception of the ESA symbol**.

N.B.
In this case, i.e. for cables and wires, only the support (spools) shall be marked.

4.5 MATERIALS AND FINISHES

All non-metallic materials and finishes that are not within a hermetically sealed enclosure of the components specified herein shall meet the outgassing requirements as outlined in ECSS-Q-ST-70-02.

All insulation materials of the components specified herein shall meet the flammability requirements outlined in ECSS-Q-ST-70-21 and the offgassing requirements outlined in ECSS-Q-ST-70-29.

Specific requirements for materials and finishes are specified in the Detail Specification.

5 PRODUCTION CONTROL

5.1 GENERAL

The minimum requirements for production control, which are equally applicable to procurement, are defined in ESCC Basic Specification No. 20100, Paras. 6.1 and 6.2.

5.2 PROTECTION OF SILVER-PLATED STRANDS

5.2.1 Packaging of Individual Wire Strands

After inspection by Quality Control personnel, individual wire strands shall be stored and shipped on spools that are packaged in sealed transparent plastic bags in accordance with Section 12, items (h) and (i).

5.2.2 Processed Strands and Braids

Partly processed strands and braids, such as those awaiting insulation covering, shall be kept under maximum humidity of 70% as briefly as possible.

5.3 SPECIAL IN-PROCESS CONTROLS

The following in-process controls are applicable.

5.3.1 Insulation Flaws (Spark Test)

After application of primary insulation and prior to application of the jacket and/or shield, 100% of the finished wire shall pass the insulation flaw test without breakdown. The applicable voltage and frequency are specified in Para. 9.6.

5.3.2 Microsectioning of Strands

The silver coating of the copper strands and the strand diameter shall be evaluated by microsectioning, using the following procedure on one sample of each production lot of strands:

- As necessary, the samples of single pieces of strands or (untwisted) pieces of stranded conductor or shield shall be electroplated with a coating of not less than 25µm of copper or nickel to protect the edges during subsequent grinding and polishing.
- The specimen shall be moulded in a low exotherm casting resin.
- The specimen shall be ground and polished transversely to its axis by use of appropriate grinding paper and diamond paste (down to 0.25µm diamond paste).
- The polished specimen shall be etched in a fresh solution of ammonia containing a few drops of hydrogen peroxide.
- The etched cross-section shall be examined with a metallographic microscope (magnification: not less than x400).
- Silver plating shall be concentric with the copper strand and have a minimum thickness as specified in the Detail Specification.
- The coating shall be free from porosity, scratches, marks, impurities, corrosion and other defects which disrupt the continuous and complete coating of the copper by silver.
- In the case of failure, the total length of strands constituting the production lot shall be rejected.

CHART I - TESTING LEVELS

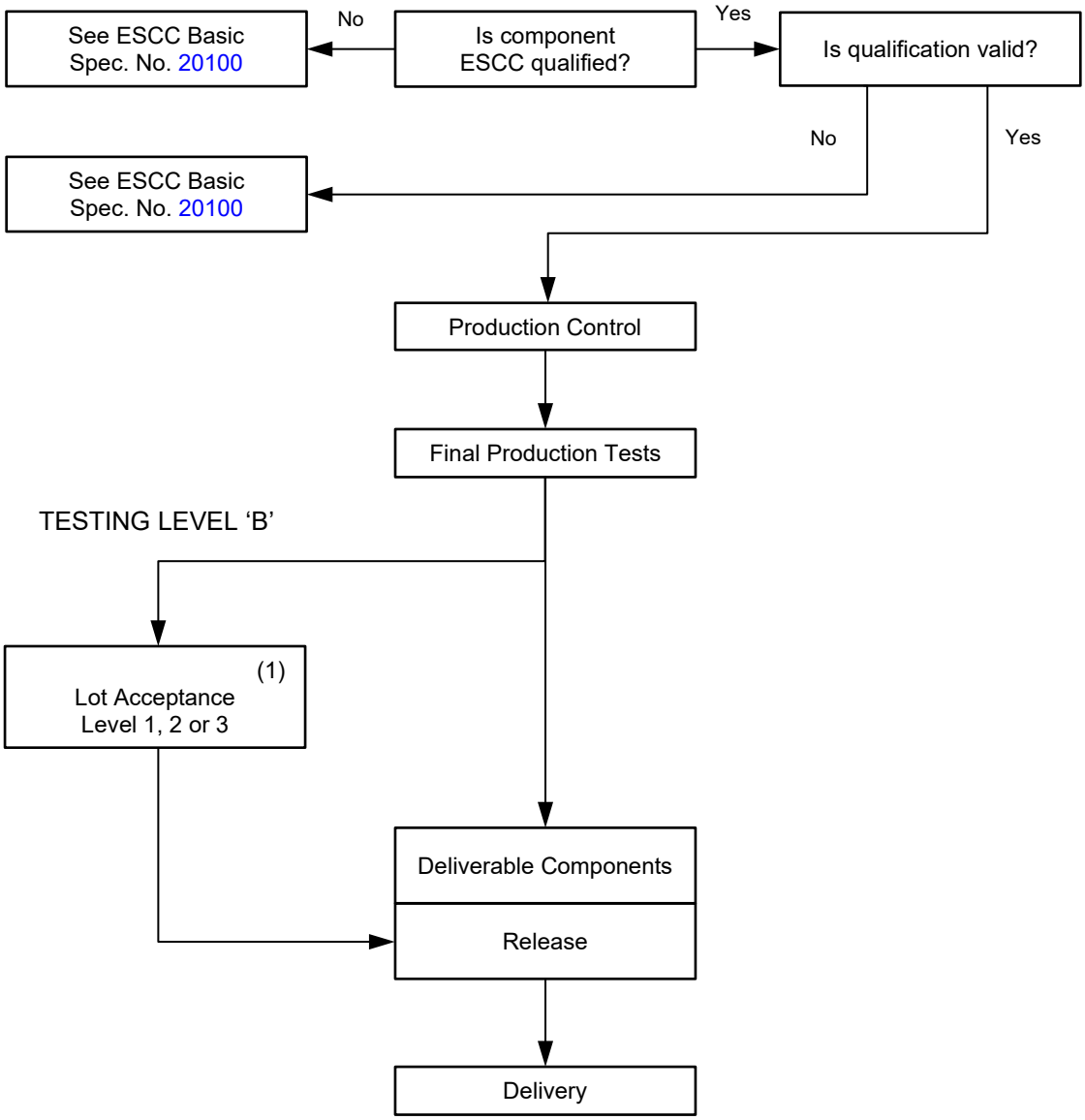

NOTES:

1. When applicable.

6 FINAL PRODUCTION TESTS

6.1 GENERAL

Unless otherwise specified in the Detail Specification, all components used for qualification testing and all components for delivery, including those submitted to lot acceptance tests, shall be subjected to tests and inspections in accordance with Chart II.

Unless otherwise specified in the Detail Specification, the tests shall be performed in the order shown.

Any components that do not meet these requirements shall be removed from the lot and at no future time be re-submitted to the requirements of this specification.

6.2 TEST METHODS AND CONDITIONS

The applicable test methods and conditions are specified in the paragraphs referenced in Chart II of this specification.

6.3 FAILURE CRITERIA

6.3.1 Parameter Limit Failure

A component shall be counted as a limit failure if one or more parameters exceed the limits shown in Tables 2 and 3 of the Detail Specification.

6.3.2 Other Failures

A component shall be counted as a failure in any of the following cases:

- Catastrophic failure.
- Mechanical failure.
- Handling failure.
- Lost component.

6.4 FAILED COMPONENTS

A component shall be considered as a failed component if it exhibits one or more of the failure modes described in Para. 6.3 of this specification.

6.5 LOT FAILURE

In case of lot failure, the Manufacturer shall act in accordance with the requirements specified in Para. 4.3.1 of this specification.

For the purpose of this specification, one failure in any of the following tests and inspections shall constitute a lot failure:

- Para. 9.1 : External Visual Inspection
- Para. 9.3 : Dimension Check
- Paras. 9.5, 9.7 and 9.8 : Electrical Measurements
- Para. 9.9 : Stripping Capability

6.6 DOCUMENTATION

Documentation of final production test data shall be in accordance with the requirements of Para. 10.6 of this specification.

7 BURN-IN AND ELECTRICAL MEASUREMENTS (CHART III)

Not applicable.

8 QUALIFICATION APPROVAL AND LOT ACCEPTANCE TESTS

8.1 QUALIFICATION TESTING

8.1.1 General

Qualification testing shall be in accordance with the requirements of Chart IV of this specification. The tests to Chart IV shall be performed on the samples specified in the paragraphs of Section 9, chosen at random from a length of cable which has successfully passed the tests in Chart II. These samples constitute the qualification test lot.

The applicable test requirements are detailed in the paragraphs referenced in Chart IV.

The conditions governing qualification testing are given in ESCC Basic Specification No. 20100, Para. 6.3 and, for the extension or renewal of qualification approval, in Paras. 7.3 and 7.4.

8.1.2 Distribution within the Qualification Test Lot

Not applicable.

8.2 LOT ACCEPTANCE TESTING

8.2.1 General

The sample sizes of the 3 lot acceptance levels are specified in Chart V of this specification. The tests to Chart V shall be performed on the samples specified in the paragraphs of Section 9, chosen at random from a length of cable of proposed delivery lot which has successfully passed the tests in Chart II.

The applicable test requirements are detailed in the paragraphs referenced in Chart V.

For procurement of qualified components, lot acceptance testing shall be performed if specified in a purchase order. Procurement lots ordered with a lot acceptance test level shall be delivered only after successful completion of lot acceptance testing.

8.2.2 Distribution within the Sample for Lot Acceptance Testing

Where a Detail Specification covers a range or series of components that are considered similar, then it may be necessary that the sample for lot acceptance testing be comprised of component types so selected that they adequately represent all of the various mechanical, structural and electrical peculiarities of the procured range or series.

The distribution of the component types will normally vary from procurement to procurement and shall be as specified by the Orderer:

(a) In case of manufacture of variants of the same wire size, the lot acceptance tests shall be performed on the most complex variants and thus all variants will be qualified.

(b) In case of manufacture of variants of different wire sizes, the lot acceptance tests shall be performed on each size.

A qualified lot may be divided for delivery purposes.

8.2.3 Lot Acceptance Level 3 Testing (LA3)

No tests or inspections are required for this level.

8.2.4 Lot Acceptance Level 2 Testing (LA2)

Lot acceptance level 2 testing shall comprise tests on an electrical and environmental subgroup. The following shall apply:

(a) The tests in this subgroup are considered to be destructive and therefore components so tested shall not form part of the delivery lot.

8.2.5 Lot Acceptance Level 1 Testing (LA1)

Lot acceptance level 1 testing shall comprise the tests for LA2 (electrical and environmental subgroup) plus tests on an endurance subgroup. For the electrical and environmental subgroup, the requirements and conditions for LA2 (see Para. 8.2.4) shall apply.

For the endurance subgroup, the following shall apply:

(a) The tests in this subgroup are considered to be destructive and therefore components so tested shall not form part of the delivery lot.

8.3 FAILURE CRITERIA

The following criteria shall apply to qualification testing and to lot acceptance testing.

8.3.1 Environmental and Mechanical Test Failures

The following shall be counted as component failures:

- Components which fail during tests for which the pass/fail criteria are inherent in the test method, e.g. solderability, resistance to solvents, etc.

8.3.2 Electrical Failures

The following shall be counted as component failures:

(a) Components which, when subjected to electrical measurements, in accordance with Table 2 of the Detail Specification, fail one or more of the applicable limits.

8.3.3 Other Failures

The following additional failures may also occur during qualification testing or lot acceptance testing:

(a) Components failing to comply with the requirements of ESCC Basic Specification No. 20500.

(b) Lost components.

8.4 FAILED COMPONENTS

A component shall be considered as failed if it exhibits one or more of the failure modes detailed in Para. 8.3 of this specification. The allowable number of failed components per subgroup, the aggregate failure constraints and the permitted distribution of such failures are shown at the foot of Charts IV and V of this specification.

When requested by the ESCC Executive or the Orderer, failure analysis of failed components shall be performed by the Manufacturer and the results provided.

Failed components from successful lots shall be marked as such and be stored at the Manufacturer's plant for 24 months.

8.5 LOT FAILURE

A lot shall be considered as failed if the allowable number of failures according to Chart IV or V of this specification, as relevant, has been exceeded.

In the case of lot failure, the Manufacturer shall act in accordance with Para. 4.3.1 of this specification.

8.6 DOCUMENTATION

For qualification testing, the qualification test data shall be documented in accordance with the requirements of Para. 10.8 of this specification.

In the case of lot acceptance testing, the data shall be documented in accordance with the requirements of Para. 10.9 of this specification.

CHART II - FINAL PRODUCTION TESTS

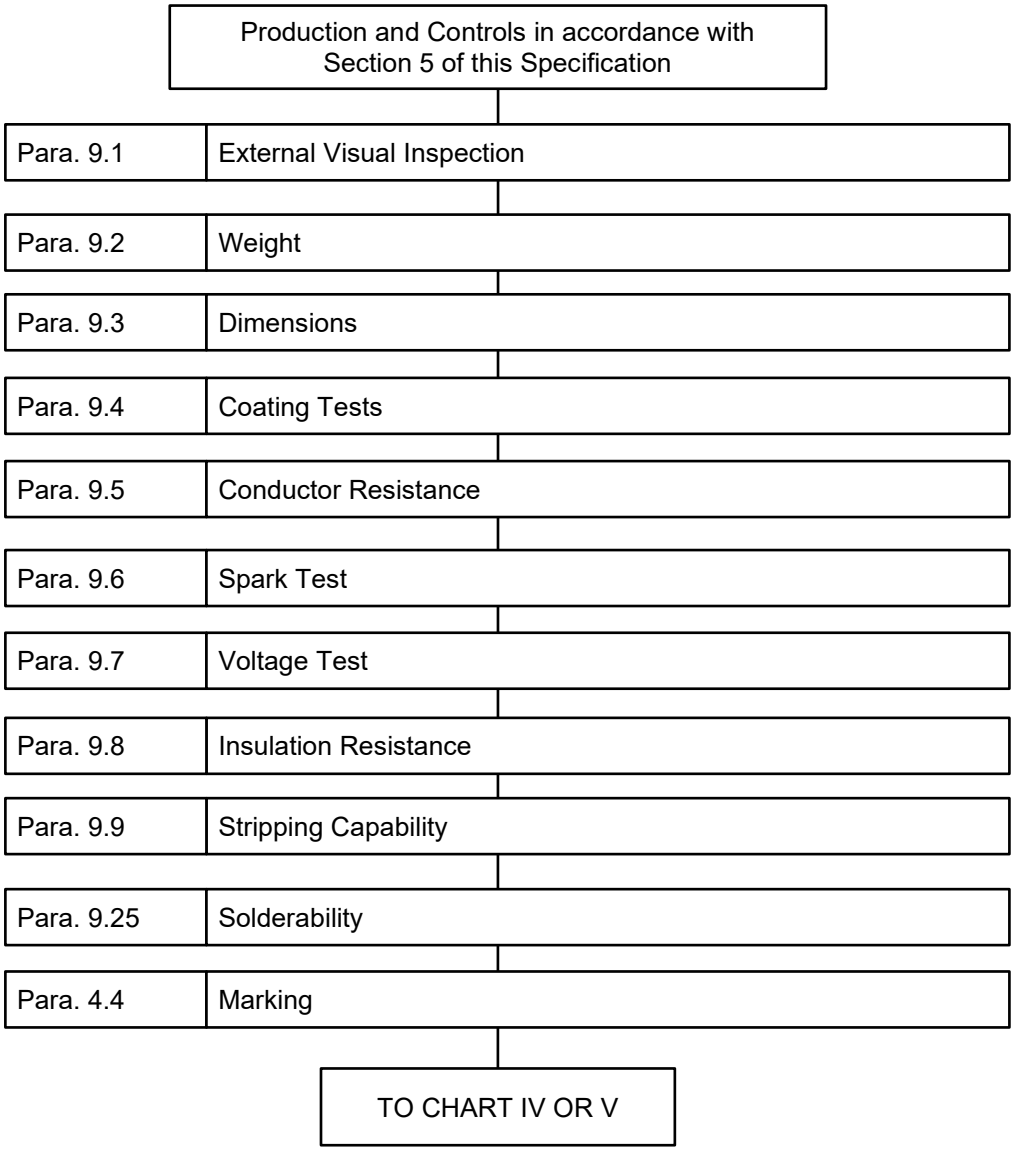

CHART III - BURN-IN AND ELECTRICAL MEASUREMENTS

Not applicable.

CHART IV - QUALIFICATION TESTS (NOTE 1)

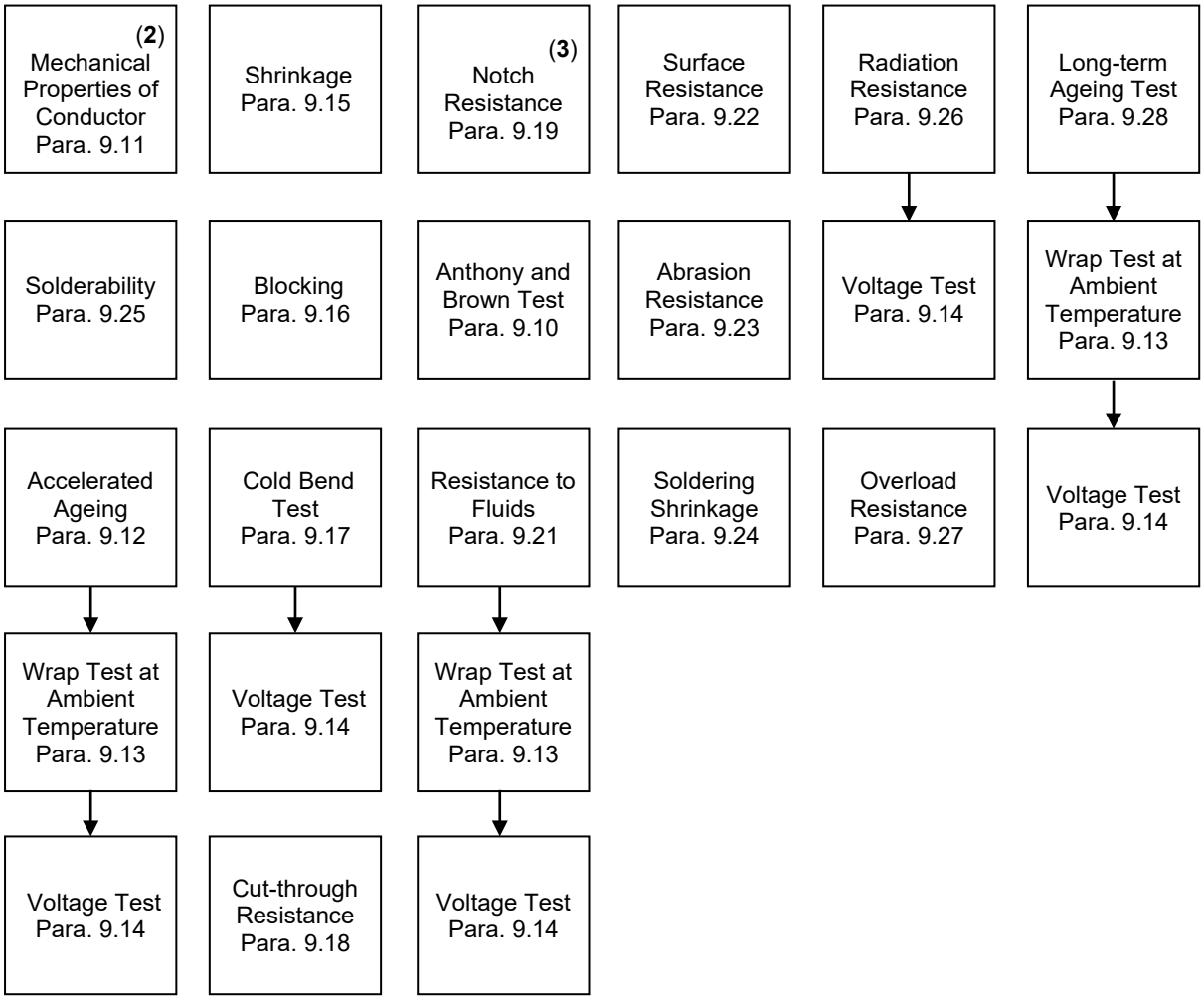

NOTES:

1. No failures are allowed for all tests except Para. 9.11 Mechanical Properties of Conductor and Para. 9.19 Notch Resistance.
2. A single sample failure is allowed but the failed parameter shall be no less than 30% of the required limit.
3. A single sample failure is allowed.

CHART V - LOT ACCEPTANCE TESTS (NOTE 1)

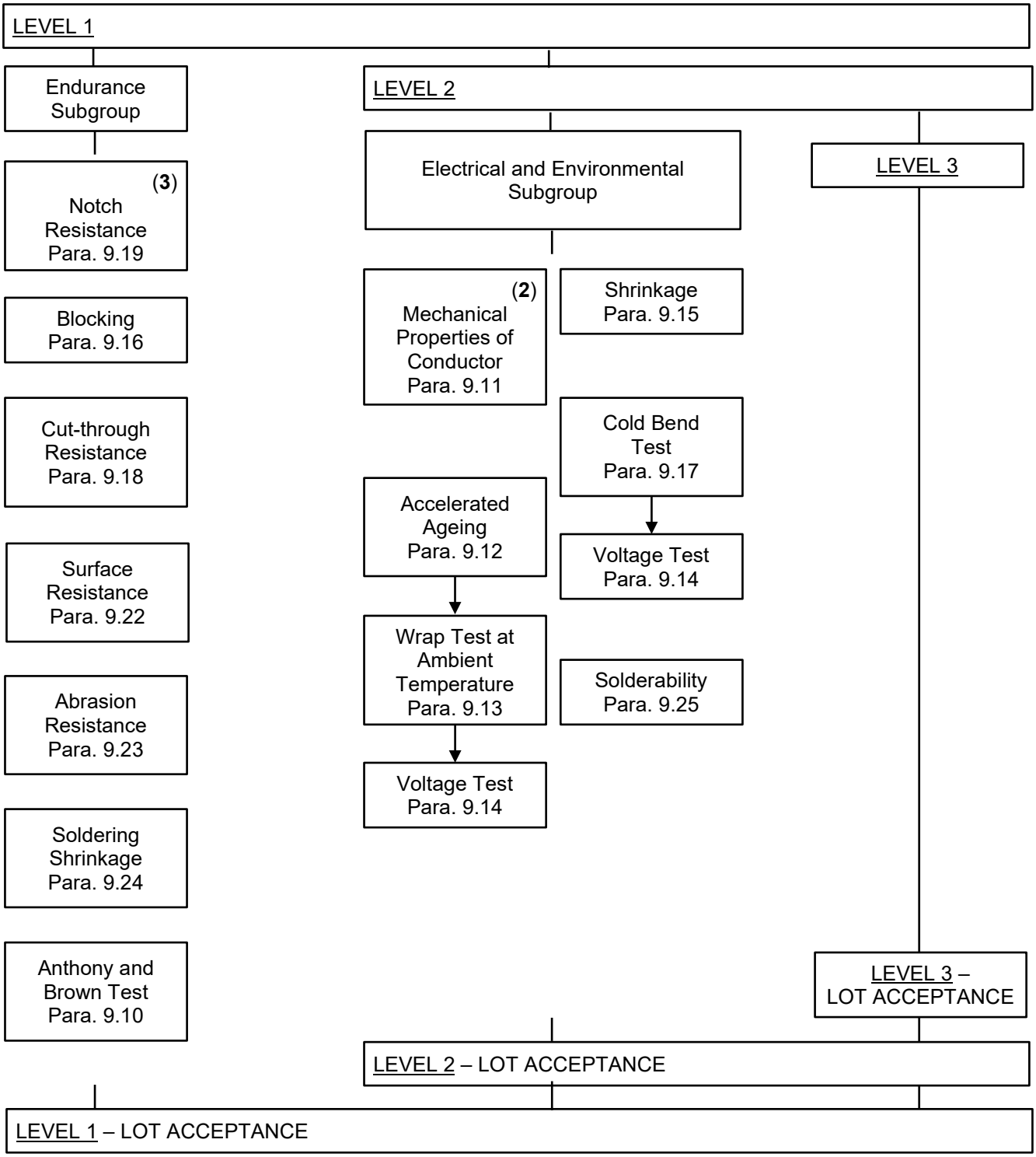

NOTES:

1. No failures are allowed for all tests except Para. 9.11 Mechanical Properties of Conductor and Para. 9.19 Notch Resistance.
2. A single sample failure is allowed but the failed parameter shall be no less than 30% of the required limit.
3. A single sample failure is allowed.

9 TEST METHODS AND PROCEDURES

The test methods, conditions and procedures are specified in the following paragraphs.

Whenever sampling is specified at the start and upon completion of lot production, it shall be understood that this means:

- For finished wires, the first and last sealed lengths that were marked during production, and
- For cables, the first and last assembled lengths that were marked during production.

If a Manufacturer elects to eliminate or modify a test method or procedure, the Manufacturer is still responsible for delivering components that meet all of the performance, quality and reliability requirements defined in this specification and the Detail Specification.

Documentation supporting the change shall be approved by the ESCC Executive and retained by the Manufacturer. It shall be copied, when requested, to the ESCC Executive.

The change shall be specified in the Detail Specification and in the PID.

9.1 EXTERNAL VISUAL INSPECTION

Visual inspection shall be performed according to ESCC Basic Specification No. 20500 of the whole cable length.

9.2 WEIGHT

The length and weight of a specimen of at least 3 metres long shall be accurately measured and the resultant measurements converted into kilogrammes per 1000 metres. The result shall be in accordance with the value specified in the Detail Specification.

9.3 DIMENSIONS

The dimensions and detail construction of the conductor, primary insulation, shield and jacket shall be checked against the values specified in the Detail Specification.

2 Samples with a length of 10cm shall be taken: one at the beginning and the other at the end of lot production.

The finished wire insulation and the single cable jacket shall be formed concentrically around the conductor. The concentricity shall not be less than 70% when measured in accordance with the Detail Specification.

9.4 COATING TESTS (CONDUCTOR AND SHIELD STRANDS)

9.4.1 Silver-coated Wires

(a) Continuity (ASTM B 298-74)

3 specimens shall be taken of strands, not less than 15cm, from a conductor previously straightened by hand. Degrease the specimens for 3 minutes in a solution consisting of alcohol and ether in equal proportions; then wipe them with a clean dry cloth after rinsing in distilled water. Specimens cleaned in this way shall not subsequently be touched by hand.

Immerse the specimens for 30 seconds in a solution of sodium polysulphide of a specific gravity of 1.142 at +20°C, wash them carefully in water. Then immerse the specimens for 15 seconds in a hydrochloric acid solution of a specific gravity of 1.088 at +20°C. Wash them carefully in water.

On examination of the specimens with the naked eye, no adherent or clearly-visible black spots shall be observed. Any blackening occurring less than 15mm from each end shall, however, not be taken into consideration.

(b) Adhesion

3 Strand specimens of not less than 15cm in length shall be taken from a conductor previously straightened by hand. One strand shall be wound around a mandrel of the same diameter as that of the wire so as to form 5 turns of a close helix. The metal coating shall be examined with the naked eye; no detachment shall be observed.

(c) Silver Thickness (ASTM B 298-74, Appendix, Method 'A')

The conductor and shield strand silver plating thicknesses shall be measured by any suitable method and have a minimum thickness as specified in the Detail Specification.

9.4.2 Other Coatings

Other coatings shall be covered by the Detail Specification.

9.5 CONDUCTOR RESISTANCE

The DC resistance of the conductor shall be checked by any suitable equipment giving an accuracy of at least 1%. This measurement shall be performed on:

(a) A sample with a length of 1 metre.

(b) The whole length (see Note).

The results shall be in accordance with the values specified in the Detail Specification. If the room temperature is not +20°C, the measured value Rθ of the ohmic resistance shall be related to +20°C by application of the formula:

$$R_{20} = \frac{R\theta}{1+\alpha(\theta-20)}$$

where α = 0.00393 for copper or the value specified in the Detail Specification for copper alloy.

N.B.

This measurement is performed for homogeneity purposes. Due to the length inaccuracy, the maximum conductor resistance shall not exceed the specified value by more than 3%.

9.6 SPARK TEST

100% of any length of finished cable shall pass the spark test without breakdown. The test shall be performed using either the dry test or the dry impulse test.

9.6.1 Dry Test

An rms voltage of 3.0kV for the insulation and 1.5kV for the jacket shall be applied. The electrode shall consist of a set of small chains or suitable metal probes forming close contact with practically the entire surface of the cable.

The length of the electrode and the speed of the cable shall be such that the insulation is subjected to the voltage test for not less than 0.02 seconds. The frequency of the applied voltage shall be 50Hz.

9.6.2 Dry Impulse Test

The form of signal shall be negative pulse with a peak value of 5kV minimum for the insulation and 2.5kV minimum for the jacket, followed by a damped oscillation.

The rise of the negative pulse of the signal between 0% and 90% of the peak voltage shall not be greater than 75µs. The peak value of the first positive overshoot of the signal and each of the damped oscillations which flow from it, shall be less than the initial negative pulse. The time during which each pulse and its damped oscillation, both positive and negative, remain at a voltage equal to 80% or higher than the peak voltage shall be between 20 and 100µs. The pulse repetition rate shall be between 200 and 500 pulses per second, inclusive. Apart from the regulation of the peak voltage, conformity with the impulse test parameters shall be defined without a capacitive load applied to the electrode.

Where a capacitive load is concerned, the tolerance within the apparatus shall be such that where there is an increase in the capacitive load between electrode and earth, the peak voltage shall not be reduced by more than 12% from an initial load of 12.5pF/25mm to 25pF/25mm of electrode length.

9.7 VOLTAGE TEST

This test shall be performed with alternating voltage (50Hz) on:

(a) A Sample:
A length of at least 5 metres of finished cable/wire shall be tested after immersion for 1 hour in a 5% aqueous solution of sodium chloride or in water containing 0.5% of wetting agent.

The voltage shall be applied for 1 minute as follows:

- For finished wires: between water and conductor, at 2.5kVrms.
- For cables, with or without a jacket: between water and all joined conductors, at 2.5kVrms.
- For shielded and jacketed cables: between water and shield, at 1.0kVrms.

(b) The Whole Length:
The voltage shall be applied for 1 minute as follows:

- For cables, with or without a jacket: between conductors, at 2.5kVrms.
- For shielded and jacketed cables, successively:
  1. between each conductor and all other conductors connected to the shield, at 1.5kVrms.
  2. between shield and all joined conductors, at 1.5kVrms.

9.8 INSULATION RESISTANCE

This test shall be performed on:

(a) A length of at least 5 metres of finished cable which has first been submitted to condition (a) of the voltage test specified in Para. 9.7. The insulation resistance shall be measured after 1 minute of electrification at a voltage of 500Vdc. The insulation resistance shall not be less than the value specified in the Detail Specification.

(b) The Whole Length

- For cables, with or without a jacket, between conductors.
- For shielded and jacketed cables, between each conductor and all other conductors connected with the shield.

The insulation resistance shall be measured under the same conditions as specified in (a) above.

9.9 STRIPPING CAPABILITY

Neither the insulation on the conductor nor the jacket on shielded or unshielded cables shall be loose (2 samples). It shall be possible to strip the insulation and the jacket of the shielded cables without difficulty when using stripping tools fitted to the particular cable construction defined in the Detail Specification. The jacket of the unshielded cables shall be easily removed by unwrapping and tearing off the polyimide tape.

For insulated wires and cables, the stripping capability shall be checked by the following procedure:

- Make an annular incision in the insulation or jacket with a thermal stripper at 20mm from the end of the sample to be stripped.
- Cause a clean annular break of the insulation or jacket by alternate bendings.
- Strip by hand, if necessary, with the help of abrasive cloth (grade 600).
- For the stripping of the jacket, perform, if necessary, an unscrewing rotating movement.

9.10 ANTHONY AND BROWN TEST (ONLY APPLICABLE TO SILVER-PLATED WIRES)

This test shall be performed in accordance with ECSS-Q-ST-70-20 on a sample as specified therein.

Acceptance Criteria:

- Codes 0 to 3: Accept.
- Codes 4 to 5: Reject.

Failure of this test entails failure of the complete qualification or lot acceptance.

9.11 MECHANICAL PROPERTIES OF CONDUCTOR (FED-STD-228-3211)

This test shall be performed on 2 groups of 3 samples with a length of 30cm: one group shall originate from the start, the other from the end of lot production.

The tensile characteristics of the conductor shall be measured using a tensile tester of sufficient adequacy to measure elongation and pull strength within 1%. The tensile rate shall be 250mm per minute and the length of the specimen between grips shall be 250 ±5mm.

The elongation shall be recorded at the breaking of the first strand. This test shall be performed on the whole conductor, including size AWG 18, and, in the case of size AWG 16 and below, on a wire strand only.

The test results shall be in conformity with the values specified in the Detail Specification (but see note below).

NOTE: a single failure is allowed within the test samples but the failed parameter shall be no less than 30% of the required value specified in the Detail Specification.

9.12 ACCELERATED AGEING

9.12.1 Finished Wires

25mm of insulation shall be removed from each end of a sample of finished wire with a length of 50cm. The central portion of this specimen shall then be bent at least half-way around a cylindrical mandrel with a diameter as specified in Table A of the Detail Specification. The ends of the conductor shall each be loaded with the weights specified in Table A.

This specimen so prepared on the mandrel shall be placed in a gravity-convected air oven and remain there for a period of 120 hours at the constant temperature specified in the Detail Specification.

On completion of the conditioning period, the specimen shall be released from tension, removed from the mandrel and straightened.

The specimen shall then be subjected to the wrap test (see Para. 9.13) and thereafter to the voltage test (see Para. 9.14).

9.12.2 Shielded and Jacketed Cables

25mm of insulation shall be removed from each end of a sample of cable with a length of 50cm. Shielded and jacketed cables shall be aged in accordance with the procedure defined in Para. 9.12.1 except that, instead of being bent around a mandrel, shielded and jacketed cables shall be aged as free coils.

9.13 WRAP TEST AT AMBIENT TEMPERATURE

At a temperature of +22 ±3°C, one end of the specimen shall be secured to the mandrel and the other end to the load weight as specified in Table A (for finished wires) and in Table B (for jacketed cables) of the Detail Specification.

The mandrel shall be rotated until the length of the specimen is wrapped around the mandrel under the specified tension and with its adjoining coils in contact.

The mandrel shall then be rotated in reverse direction until the length of the cable which was outside during the first wrapping is next to the mandrel. This procedure shall be repeated until 2 bends in each direction have been formed in the same section of the wire.

Any crack or insulation damage shall be considered as a defect.

9.14 VOLTAGE TEST

This test shall be performed with alternating voltage (50Hz) on the same sample from the previous test(s).

The sample shall be tested after immersion for 1 hour in a 5% aqueous solution of sodium chloride or in water containing 0.5% of wetting agent.

The voltage shall be applied for 1 minute as follows:

- For finished wires: between water and conductor, at 2.5kVrms.
- For cables, with or without a jacket, successively:
  1. between each conductor and all other joined conductors, at 2.5kVrms.
  2. between water and all joined conductors, at 2.5kVrms.
- For shielded and jacketed cables, successively:
  1. between each conductor and all other conductors connected with the shield, at 1.5kVrms.
  2. between shield and all joined conductors, at 1.5kVrms.
  3. between water and shield, at 1.0kVrms.

9.15 SHRINKAGE

A 30cm specimen of the finished wire or core shall be cut such that insulation and conductor are flush at both ends. The specimen shall then be aged at the temperature specified in the Detail Specification for 6 hours in a gravity-convected air oven.

On completion of this period, the specimen shall be removed from the oven and allowed to return to room temperature. Shrinkage of the insulation shall be measured by the amount the conductor protrudes beyond any part of the insulation. The shrinkage shall not exceed 2mm at either end. Any detachment of layers along the insulation or at the end shall be considered as a defect.

9.16 BLOCKING

A sample shall be wrapped on a mandrel with a diameter as specified in Table A (for finished wires) and in Table B (for shielded and jacketed cables) of the Detail Specification. It shall be wrapped until 2 layers have been formed, each consisting of 6 to 8 turns per layer. The ends of the sample shall be made firm to prevent unwrapping during the test.

The assembly shall be placed in an oven with natural ventilation for a period of 6 hours and at the temperature specified in the Detail Specification.

On completion of this period, the assembly shall be removed from the oven and allowed to cool for 1 hour at room temperature. It shall then be possible to unwind the sample from the mandrel without difficulty; the turns shall separate easily from each other without sticking to the insulation. Any detachment of layers, either along the insulation or at the ends, shall be considered as a failure.

9.17 COLD BEND TEST

One of the ends of a 1 metre sample shall be attached to a horizontal mandrel and the other end loaded in accordance with Table C of the Detail Specification. The assembly shall be placed in a chamber with a temperature of -80 ±2°C and kept at this temperature for 4 hours.

The mandrel shall then be rotated at a regular rate until the sample is fully wrapped on the mandrel; the winding rate shall be approximately 2rpm.

After winding, the sample shall be removed from the chamber and allowed to warm up to room temperature. It shall then be wiped with a dry cloth and visually examined. The cable insulation shall show no cracks.

On completion of this test, the sample shall pass the voltage test (see Para. 9.14) satisfactorily.

9.18 CUT-THROUGH RESISTANCE

This test shall be performed to check the behaviour of the finished wire or core when it comes into contact with metal cutting edges.

It shall be performed on 3 samples, each 30cm long, using suitable test equipment. Each sample shall be positioned on the test equipment such that a cutting needle is perpendicular to the cable axis. The needle used shall have a diameter of 0.45mm (size No. 10). The test shall be carried out at T_{amb} = +23 ±3°C.

The needle shall be gradually loaded until contact is made between the needle and the conductor. The needle shall either be loaded at a maximum rate of 6kg/minute or moved at a maximum speed of 2mm/minute. The test shall be performed 3 times on each of the 3 samples; each sample shall be moved forward 75mm between tests and turned through an angle of 120°, always in the same direction. The cut-through load shall be recorded for all 9 tests.

The mean cut-through load calculated from the 9 test results shall not be less than the relevant value specified in the Detail Specification. In addition, no more than 1 of the 9 test results shall be less than the relevant value specified in the Detail Specification; that result shall be no less than 30% of the value specified.

9.19 NOTCH RESISTANCE

The test shall be performed on 3 samples. Using a razor blade, mounted in a test rig, a notch (perpendicular to the wire axis and to a depth as specified in the Detail Specification) shall be made on each specimen. The notched specimens shall then be wrapped on a mandrel (with a diameter equal to 6 times the wire diameter.

The notch shall not propagate down to the conductor (but see note below).

NOTE: a single failure within the test samples is allowed.

9.20 NOT APPLICABLE

9.21 RESISTANCE TO FLUIDS

This test shall be performed on one 60cm long specimen per fluid.

After having been subjected to the immersion test, the specimen shall show no evidence of cracking and shall withstand the voltage test (see Para. 9.14) without breakdown or flash-over. The increase in the specimen's diameter shall not exceed 5%.

Separate specimens of wire with a length of 60cm shall be immersed to within 15cm of their ends in each of the following fluids (a) through (d) for 24 hours at normal room temperature and in propellants (e) through (g) for 30 minutes at normal room temperature:

(a) Ethyl alcohol, ACS grade, 99.5% pure.
(b) Isopropyl alcohol, best commercial grade, 99% pure.
(c) Acetone, electronic grade.
(d) Xylene, electronic grade.
(e) Propellant, hydrazine, Military Specification MIL-PRF-26536.
(f) Propellant, nitrogen tetroxide, Military Specification MIL-PRF-26539.
(g) Propellant, dimethylhydrazine (UDMH), ARIANE grade.

On removal from the liquids, the specimens shall remain for 1 hour in free air at room temperature. Subsequently, 25mm of insulation shall be removed from each end of the specimen. The specimen shall then be subjected to the wrap test (see Para. 9.13) and voltage test (see Para. 9.14). During the immersion tests, the bend of the specimen shall not be less than 6 times its specified maximum diameter.

9.22 SURFACE RESISTANCE (FED-STD-228-6041)

Specimens shall consist of 15cm lengths of finished wire or core provided with two 4.2mm ring-type foil electrodes or, for small wires, several turns of fine tin-coated copper wire, spaced 25mm apart between nearest edges nearest the centre of the specimen length, wrapped snugly around the axis of the specimen and bound with take-off leads for electrical testing of the surface between the electrodes.

After conditioning the specimens prepared as above for 96 hours at a relative humidity of 95 ±5% and at a temperature of +22 ±3°C, the resistance between the electrodes shall be measured with a DC potential of 200V to 500V while the specimens are still in the conditioning chamber and after 1 minute of electrification.

The surface resistance shall be computed by multiplying the measured resistance value by the measured (overall) diameter of the specimen in mm. Following the initial measurement of surface resistance, a 2500Vrms, 50 cycle potential shall be applied between the electrodes for a period of 1 minute.

There shall be no evidence of distress such as arcing, smoking or burning, flash-over or dielectric failures. After a discharge of 15 to 20 minutes following the potential test, the surface resistance shall be measured and computed. Both values of computed surface resistance shall be greater than specified in the Detail Specification.

9.23 ABRASION RESISTANCE

One 50cm long sample shall be used for this test.

The equipment shall be in accordance with the details given in Figure I and so designed that the surface of the insulation is worn in parallel with the wire axis over a length of not less than 10mm at a rate of 50 to 60 cycles per minute.

The test system shall be fitted with a counter and an automatic cut-out to detect contact between the abrading needle and conductor. The weight applied to the needle shall be as given in the Detail Specification.

The needle used shall have a diameter of 0.45mm (size No. 10).

4 tests shall be made on each specimen with the specimen being moved forward 100mm and rotated through 90° in 1 direction between tests.

The scrape abrasion resistance is defined as the number of complete cycles for the needle to wear through the complete conductor covering and stop the machine. Each total number of cycles recorded shall be not less than 100.

FIGURE I - ABRASION RESISTANCE TEST RIG

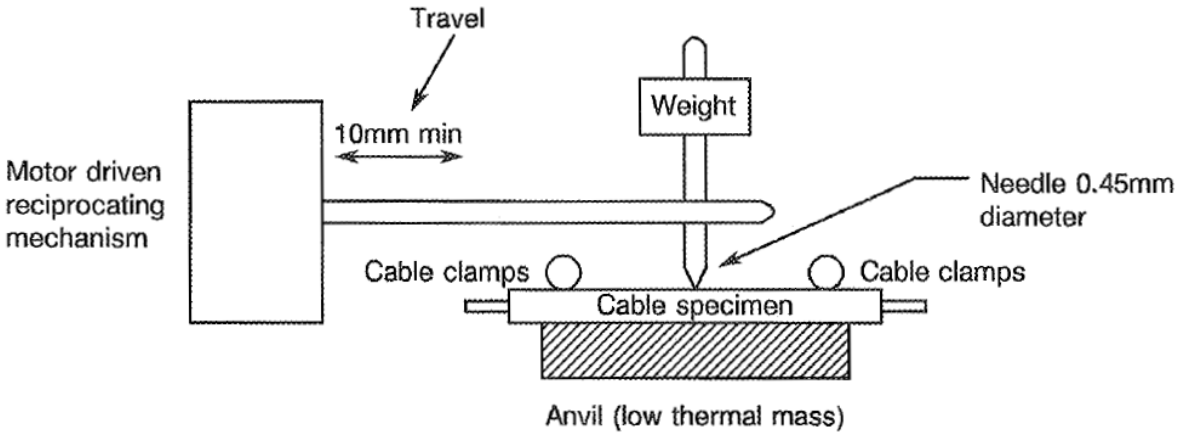

A cycle is defined as being equal to the needle movement to its maximum travel followed by return to its original position.

9.24 SOLDERING SHRINKAGE

A specimen of finished wire or core of 152mm in length shall be prepared for test by removing 12.7mm of insulation at one end. At a point 12.7mm from the stripped end of the wire, the specimen shall be given a 90° bend over a mandrel of its own diameter. This end shall then be immersed for 5 seconds to within 3.1mm of the insulation in a pot of molten 60-40 (tin-lead) solder which is maintained at a temperature of +320 ±10°C.

The distance over which the primary insulation has shrunk back along the conductor shall then be measured and it shall not exceed 1.5mm.

9.25 SOLDERABILITY

This test shall be performed according to IEC 68-2-20, Test Ta, Method 1, except that the ageing condition shall be deleted.

The test specimen shall have a length of 15cm and be stripped of insulation over a length of 5.0cm from the end to be tested.

9.26 RADIATION RESISTANCE

A specimen of 1.0m in length shall be subjected to a radiation dosage of 1.0Mrad. The radiation rate shall not exceed 0.1Mrad per minute. After having been irradiated, the specimen shall not show any cracks and withstand the voltage test (see Para. 9.14).

9.27 OVERLOAD RESISTANCE

9.27.1 Object of Test

This test shall demonstrate that there will be:

(a) No emission of smoke at a current overload producing a conductor temperature of +250°C.

(b) No burning or insulation damage at a current overload producing a conductor temperature of +400°C.

9.27.2 Test Procedure

The test shall be performed on a 1.0m long sample at +22 ±3°C in a chamber which shields the sample from draughts. Air extraction may be provided via a small diameter pipe, but shall not be started before the end of the test. A background with horizontal black and white stripes, or some other means of smoke detection, shall be used.

Each sample shall be arranged such that the central portion (approximately 1/3 of the sample length), marked by the voltage connections, shall be free and horizontal without being supported.

One of the ends shall be loaded with a weight to prevent sagging during the test. The current shall be initially set for 30 minutes to a first value producing a conductor temperature of +250°C and there shall be:

- No persistent emission of smoke.
- No odour.
- No significant change in colour.

The current shall then be increased for 15 minutes to a second value producing a conductor temperature of +400°C. There shall be:

- No spontaneous combustion.
- No splitting of the primary insulation.
- No exposure of the conductor.

9.28 LONG-TERM AGEING TEST

This test shall be performed on 10 samples, each 60cm long, in the same manner as the "accelerated ageing test" (see Para. 9.12) except for the following conditions:

- The duration shall be at least 2000 hours.
- The temperature shall be as defined in the Detail Specification.

10 DATA DOCUMENTATION

10.1 GENERAL

For the qualification approval records and with each component delivery, a data documentation package is required. Depending on the lot acceptance level specified for the component, this package shall be compiled from:

(a) Cover sheet (or sheets).
(b) List of equipment (testing and measuring).
(c) List of test references.
(d) Final production test data (Chart II) (but see Para. 10.6).
(e) Qualification test data (Chart IV).
(f) Lot acceptance test data (Chart V) (when applicable).
(g) Failed component list (see Para. 8.4) and failure analysis report (see Para. 8.4).
(h) Certificate of Conformity.

Items (a) to (h) inclusive shall be grouped, preferably as subpackages and, for identification purposes, each page shall include the following information:

- ESCC Component number.
- Manufacturer's name.
- Lot identification.
- Date of establishment of the document.
- Page number.

10.1.1 Qualification Approval

In the case of qualification approval, the items listed in Para. 10.1 (a) to (h) less item (f) are required.

10.1.2 Testing Level 'B'

10.1.2.1 Qualified Components

For deliveries of qualified components, the following documentation shall be supplied:

(a) Cover sheet (if all of the information is not included on the Certificate of Conformity).
(b) Certificate of Conformity (including range of delivered spool numbers).
(c) Attributes record of measurements, tests and inspections performed in Chart II and Chart V (where applicable).
(d) Failed components list.

10.1.2.2 Unqualified Components

For deliveries of unqualified components, the documentation to be supplied shall be in accordance with Para. 10.1.2.1 plus the following:

(a) Special in-process control data (where applicable).
(b) Failure analysis report on failed components.

10.1.3 Testing Level 'C'

Not applicable.

10.1.4 Data Retention/Data Access

If not delivered, all data shall be retained by the Manufacturer for a minimum of 5 years during which time it shall be available to the ESCC Executive and the Orderer, if requested, for review. The Manufacturer shall deliver variables Data/Reports to the Orderer if required by the Purchase Order.

10.2 COVER SHEET(S)

The cover sheet(s) of the data documentation package shall include as a minimum:

(a) Reference to the Detail Specification, including issue and date.
(b) Reference to the applicable ESCC Generic Specification, including issue and date.
(c) Component type and number.
(d) Lot identification.
(e) Range of delivered spool numbers.
(f) Number of purchase order.
(g) Information relative to any additions to this specification and/or the Detail Specification.
(h) Manufacturer's name and address.
(i) Location of the manufacturing plant.
(j) Signature on behalf of Manufacturer.
(k) Total number of pages of the data package.

10.3 LIST OF EQUIPMENT USED

A list of equipment used for tests and measurements shall be prepared, if not in accordance with the data given in the Process Identification Document (PID). Where applicable, this list shall contain inventory number, Manufacturer's type number, serial number, etc. This list shall indicate for which tests such equipment was used.

10.4 LIST OF TEST REFERENCES

This list shall include all Manufacturer's references or codes which are necessary to correlate the test data provided with the applicable tests specified in the tables of the Detail Specification.

10.5 SPECIAL IN-PROCESS CONTROL DATA

Shall not be supplied.

10.6 FINAL PRODUCTION TEST DATA (CHART II)

A test result summary shall be compiled showing the total number of components submitted to, and the total number rejected after, each test, measurement and inspection of Chart II.

The final production test data shall form an integral part of the data documentation package, but it is not a mandatory requirement that it be delivered with the qualification lot or delivery lot. However, the data package to be delivered shall contain the information as detailed in Para. 10.1.2 or at least shall contain a list of final production tests actually performed and a certification that the data is available for review.

10.7 BURN-IN AND ELECTRICAL MEASUREMENT DATA (CHART III)

Not applicable.

10.8 QUALIFICATION TEST DATA (CHART IV)

All data shall be referenced to the relevant serial numbers. Detailed records shall be provided of the components submitted to each test in each of the subgroups and of those rejected. Detailed data shall be provided of all electrical measurements made in accordance with Table 6 of the Detail Specification, as and where applicable.

10.9 LOT ACCEPTANCE TEST DATA (CHART V)

10.9.1 Testing Level 'B'

All data shall be referenced to the relevant serial numbers. Detailed records shall be provided of the components submitted to each test in each of the subgroups (as relevant to the lot acceptance level) and of those rejected.

Detailed data shall be provided of all electrical measurements made in accordance with Table 6 of the Detail Specification, as and where applicable.

10.9.2 Testing Level 'C'

Not applicable.

10.10 FAILED COMPONENTS LIST AND FAILURE ANALYSIS REPORT

The failed component list and failure analysis report shall provide full details of:

(a) The reference number and description of the test or measurement performed as defined in this specification and/or the Detail Specification.

(b) The spool number (if applicable) of the failed component.

(c) The failed parameter and the failure mode of the component.

(d) Detailed failure analysis, if requested.

10.11 CERTIFICATE OF CONFORMITY

A Certificate of Conformity shall be established as defined in ESCC Basic Specification No. 20100.

11 DELIVERY

For qualification approval, the disposition of the qualification test lot and its related documentation shall be as specified in ESCC Basic Specification No. 20100 and the relevant paragraphs of Section 10 of this specification.

For procurement, for each order, the items forming the delivery are:

(a) The delivery lot.

(b) The components used for lot acceptance testing, (when applicable), but not forming part of the delivery lot (see Paras. 8.2.4 and 8.2.5).

(c) The relevant documentation in accordance with the requirements of Section 10 of this specification.

In the case of a component for which a valid qualification approval is in force, all data of all components submitted to LA1 and LA2 testing shall also be copied, when requested, to the ESCC Executive.

12 PACKAGING AND DESPATCH

The packaging and despatch of components to this specification shall be in accordance with the requirements of ESCC Basic Specification No. 20600 and the following rules:

(a) All finished wires shall be packaged on spools.

(b) One spool shall only receive finished wire from a unique lot.

(c) All finished wire ends shall be accessible over a length of at least 10cm out from the spool.

(d) No more than 3 lengths of wire shall be wound on the same spool; each wire end shall be marked.

(e) No spool shall receive more than 400 metres of finished wire; no unit length shall be less than 8 metres.

(f) Spool hubs shall be cylindrical and have a diameter exceeding 70 times the maximum external wire diameter for single wires (shielded or unshielded), or 30 times the maximum external diameter for twisted wires (shielded or unshielded).

(g) The ends of finished wire shall be sealed with heat-shrinkable caps or other suitable means of protection against possible ingress of moisture under the insulation. The seals shall be renewed whenever a piece of wire has been cut off for testing or other use.

(h) For storage, the wire spools shall be heat-sealed into polyethylene bags. The bags shall be sufficiently large to enable resealing at least twice. The humidity indicators shall be placed such that they can be inspected easily without breaking the moisture seal. Polyvinylchloride shall not be used as packaging or packing material.

Desiccant or dry nitrogen shall be used in the package. An easy means for indicating that the humidity is below 50% RH shall be provided, capable of being read without opening the package.

(i) For shipment, the bags specified under (h) shall be placed in another polyethelene bag which shall be sealed to prevent damage to the primary package. This second bag may be removed for further storage.